504 SERIES HEAVY-DUTY DOUBLE PEDESTAL ARM HOSE REELS - 1/2"

50' MAXIMUM HOSE CAPACITY

Full metal Heavy-Duty double pedestal hose reels, with hose capacity up to 50' x 1/2" hose.

- Very tough construction able to stand regular use and abuse in Intensive Duty applications.
- Fatigue resistant steel spring for years of durable performance and even load when pulling and recoiling the hose.
- Fully ported shaft and swivel.
- Spool mounted on two permanently lubricated and sealed ball bearings to reduce torque load on spring for smooth retraction and longer life.
- Large latching area for easier operation.
- Hose guide arm can be placed in different positions to accommodate any method of mounting.
- Narrow footprint allows mounting more reels on the same surface.
- Hose reels with hose include 30" inlet hose.

FLUIDS HANDLED
- Air.
- Water.
- Antifreeze and Windshield Wash Solutions.
- High Pressure Hot Water.
- Synthetic and Mineral Oils.
- Grease.

MARKETS / APPLICATIONS
- Car and truck dealers.
- Service shops.
- Fleets.
- Lube trucks.
- Mining and construction.
- Railroad and mass transit.
- General manufacturing.

MOUNTING
- Floor.
- Wall.
- Ceiling.
- Tank.

Dimensions Inches (mm)

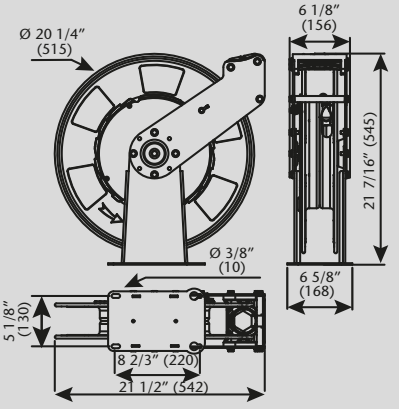

Hose reels are delivered in ceiling mount position.

HOSE REEL PART No.	HOSE LENGTH	HOSE I.D.	OUTLET THREAD	MAX. WORKING PRESSURE	NET WEIGHT	REEL ONLY WITH SWIVEL PART No.
LOW PRESSURE - AIR, WATER						
504 151	50'	3/8"	3/8" NPTM	300 psi	49.5 lb	**504 159**
504 152	50'	3/8"	1/4" NPTM	300 psi	49.5 lb	**504 159**
504 150	50'	1/2"	1/2" NPTM	300 psi	52.8 lb	**504 159**
MEDIUM PRESSURE OILS, FLUIDS						
504 251	40'	1/2"	1/2" NPTM	2000 psi	55.0 lb	**504 259**
504 250	50'	1/2"	1/2" NPTM	2000 psi	57.3 lb	**504 259**
HIGH PRESSURE GREASE						
504 350	50'	1/4"	1/4" NPTM	5,000 psi	58.4 lb	**504 359**
504 351	50'	3/8"	1/4" NPTM	4,000 psi	60.6 lb	**504 359**

Reel includes inlet swivel.
Reel with hose includes hose stop and 30" inlet hose.

MANUAL FOR ALL 504 SERIES HOSE REELS: 850 838

Product specifications are subject to change without prior notice