REVISIONS					
LTR	DESCRIPTION	E. N.	DATE	DRN	CHK
-	DRAWING RELEASE	---	042199	GG	GG
A	REVISED NOTES. REMOVED HEAD TOP PORT. ADDED NEW DRAIN VALVE.	---	011200	GG	GG
B	REVISED NOTES. REDRAWN ON PRO/E TO CURRENT STANDARDS.	19747	102907	MEC	RH

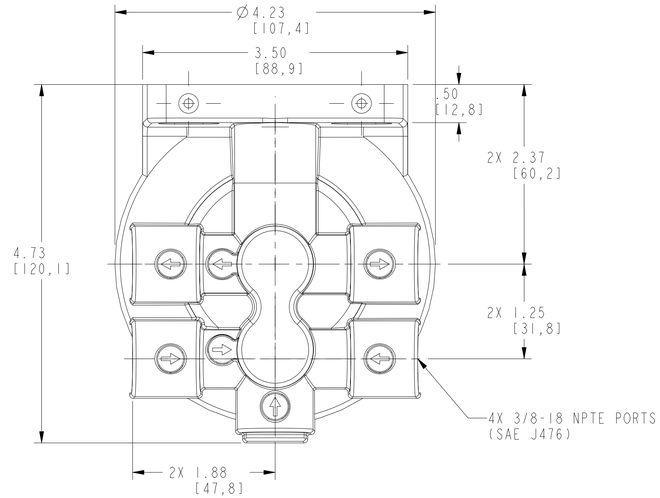

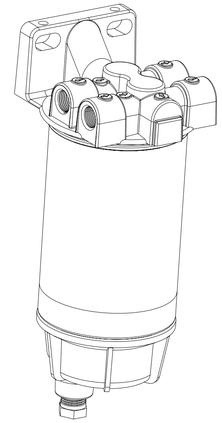

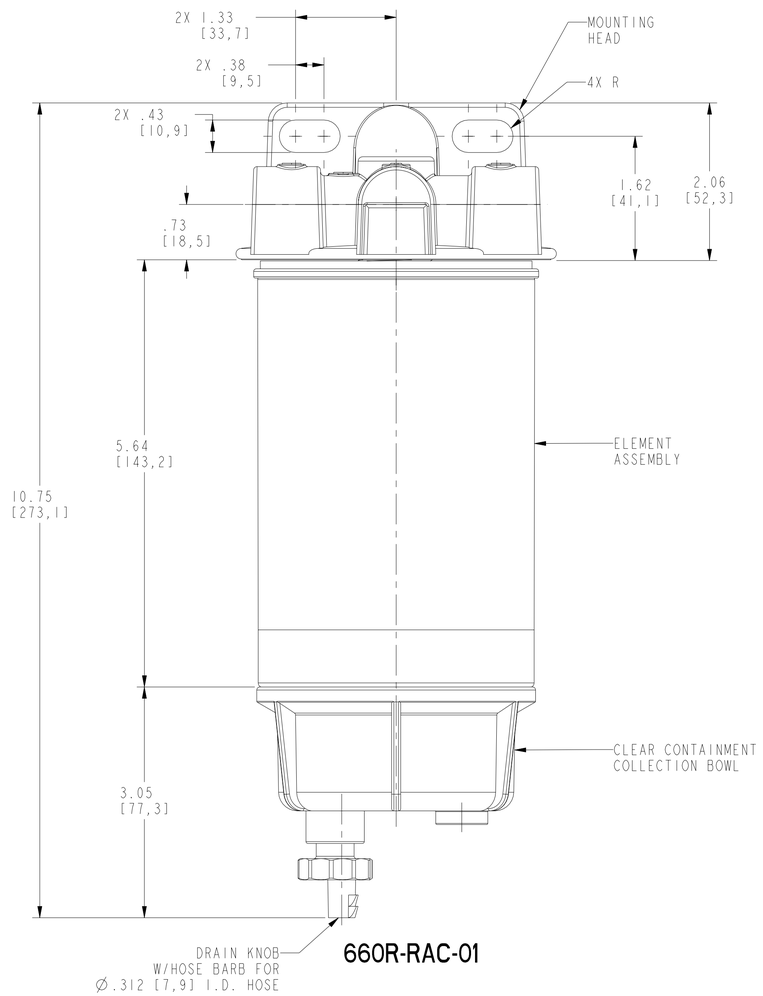

660R-RAC-01

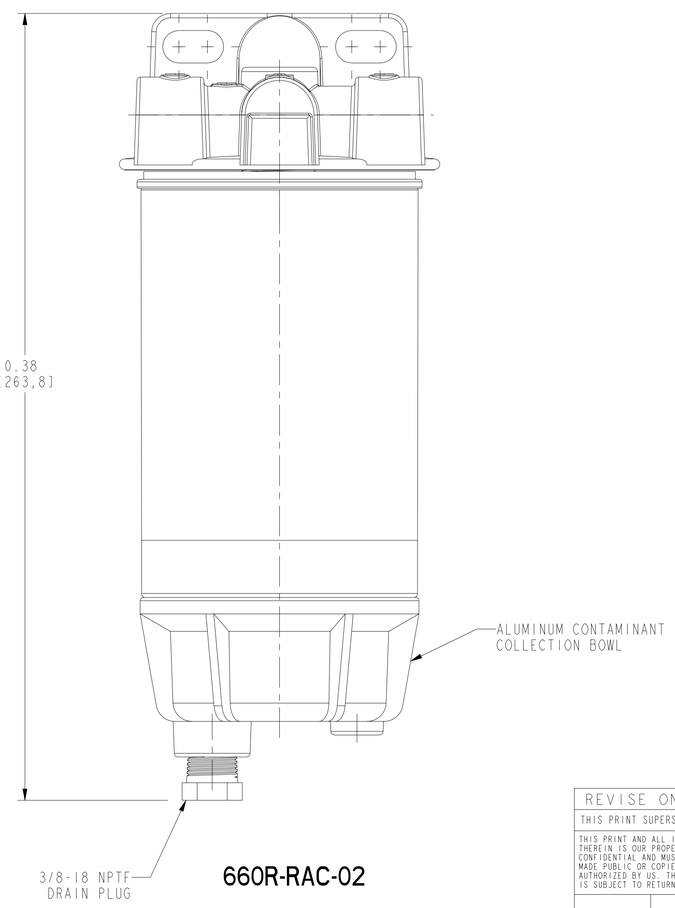

660R-RAC-02

NOTES: UNLESS OTHERWISE SPECIFIED-

1. DIMENSIONS GIVEN REPRESENT NOMINAL VALUES AND ARE FOR REFERENCE ONLY.
   DIMENSIONING SCHEME: INCH [MM]

2. SPECIFICATIONS:
   A. APPLICATION: GASOLINE (OR DIESEL), VACUUM SIDE
   B. MAXIMUM ALLOWABLE PRESSURE: 7 PSI/48 kPa
   C. MAXIMUM FLOW RATE: 90 GHP/341 LPH
   D. FUEL PORT THREADS: 3/8-18 NPTF (4 INLET, 3 OUTLET)
   E. BOWL WATER CAPACITY: 2.0 OZ. [58 ml]
   F. ALLOW AT LEAST 2 INCHES [51 MM] UNDER UNITS FOR SERVICE.

3. FEATURES:
   ALUMINUM MOUNTING HEAD FEATURES AN ANODIZED COATING AND WHITE EPOXY POWDER PAINT TOP COAT FOR INCREASED CORROSION PROTECTION.

4. SERVICE PARTS:
   ELEMENTS:
   -660R-RAC-01: S3232 (10 MICRON)
   -660R-RAC-02: S3232UL (10 MICRON)

   MOUNTING HEAD: RK21411

   BOWLS:
   -CLEAR BOWL: RK30475
   -ALUMINUM BOWL: RK30473-02

5. PACKAGING:
   STANDARD PACKAGING IS A CASE QUANTITY OF TWELVE.

CUSTOMER INTERFACE DRAWING

QUANTITY REQD	PART NUMBER	DESCRIPTION	ITEM NO.

PARTS LIST

REVISE ONLY ON Pro/E SYSTEM

THIS PRINT SUPERSEDES ANY EARLIER DATE; DESTROY SAME

THIS PRINT AND ALL INFORMATION THEREIN IS OUR PROPERTY, IS CONFIDENTIAL AND MUST NOT BE MADE PUBLIC OR COPIED UNLESS AUTHORIZED BY US. THIS PRINT IS SUBJECT TO RETURN ON DEMAND.

MATERIAL: -

FINISH: -

NEXT ASSY | FIRST USED ON

APPLICATION

		DATE
DRAWN	G. GARCIA	042199
CHECK	G. GARCIA	042199
DESIGN		

UNLESS OTHERWISE SPECIFIED:
DIMENSIONS ARE IN INCHES
TOLERANCES
DECIMAL .XX= ± - .XXX= ± -
ANGULAR ± -
FRACTIONAL ±

DO NOT SCALE DRAWING

RACOR®
PARKER HANNIFIN CORPORATION
RACOR DIVISION
P.O. BOX 3208
MODESTO, CA 95353

TITLE
MARINE SPIN-ON
FF/WS ASSEMBLY

SIZE	CODE IDENT NO.	DWG. NO.	REV
D	55752	660R-RAC-XX	B

SCALE NONE | RELEASE DATE 042199 | SHEET 1 OF 1

Lev | Ver | Rev