35991

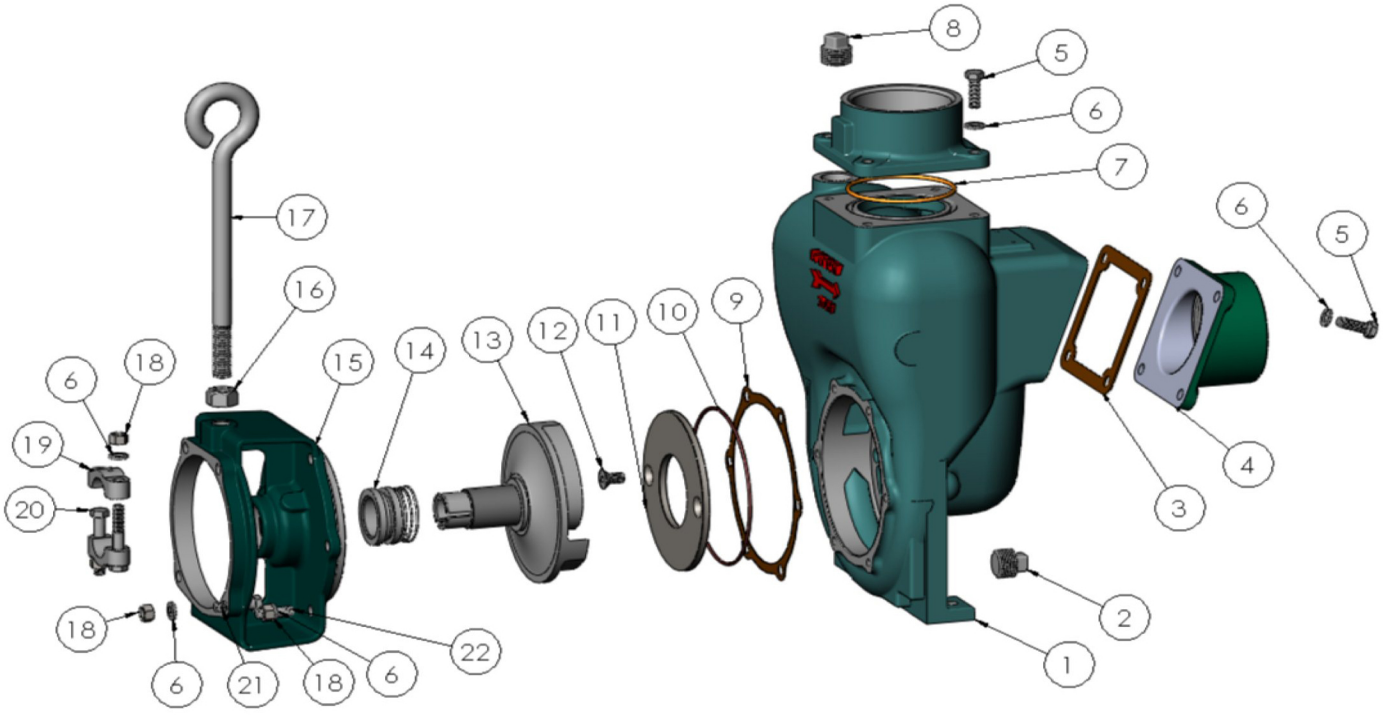

	PART NO.	ITEM NO.	DESCRIPTION	QTY.		PART NO.	ITEM NO.	DESCRIPTION	QTY.
	22351	1	HOUSING C	1		23038	13	IMPELLER S/A - D 6.0 DIA.	1
	35650	2	PIPE PLUG S.S. - 3/4" NPT	1	*	22363	14	SEAL- 1.5" - TYPE 21 CAR/NRS VITON	1
*	35630	3	GASKET SUCTION - BUNA	1		22345	15	ADAPTER C	1
	22468	4	FLANGE - SUCTION C	1		22461	16	HEX NUT STL - 5/8-11	1
	21291	5	CAP SCREW S.S.- 3/8-16 X 1.13"	8		22460	17	LIFT EYE ZPS 5/8-11 X 10"	1
	21266	6	LOCK WASHER- 3/8	20		21268	18	HEX NUT - S.S. 3/8-16	12
*	37138	7	O RING DISCHARGE - VITON	1		22356	19	CLAMP S.S.- 1"	2
	41481	8	PIPE PLUG C - 3/4" NPT	1		21269	20	CAP SCREW- S.S. 3/8-16 X 2.25"	2
*	35721	9	GASKET - KINGERSIL C-4433	1		21256	21	CAP SCREW- S.S. 3/8-16 X 1.38"	4
*	29715	10	O RING - VITON	1		21260	22	STUD S.S. - 3/8-16 X 1.32"	6
*	22244	11	WEAR PLATE STL.	1					
	37115	12	FLAT HD. SCR. S.S. - 3/8-16 X .75"	2					

*- RECOMMENDED REPLACEMENT PARTS

36048

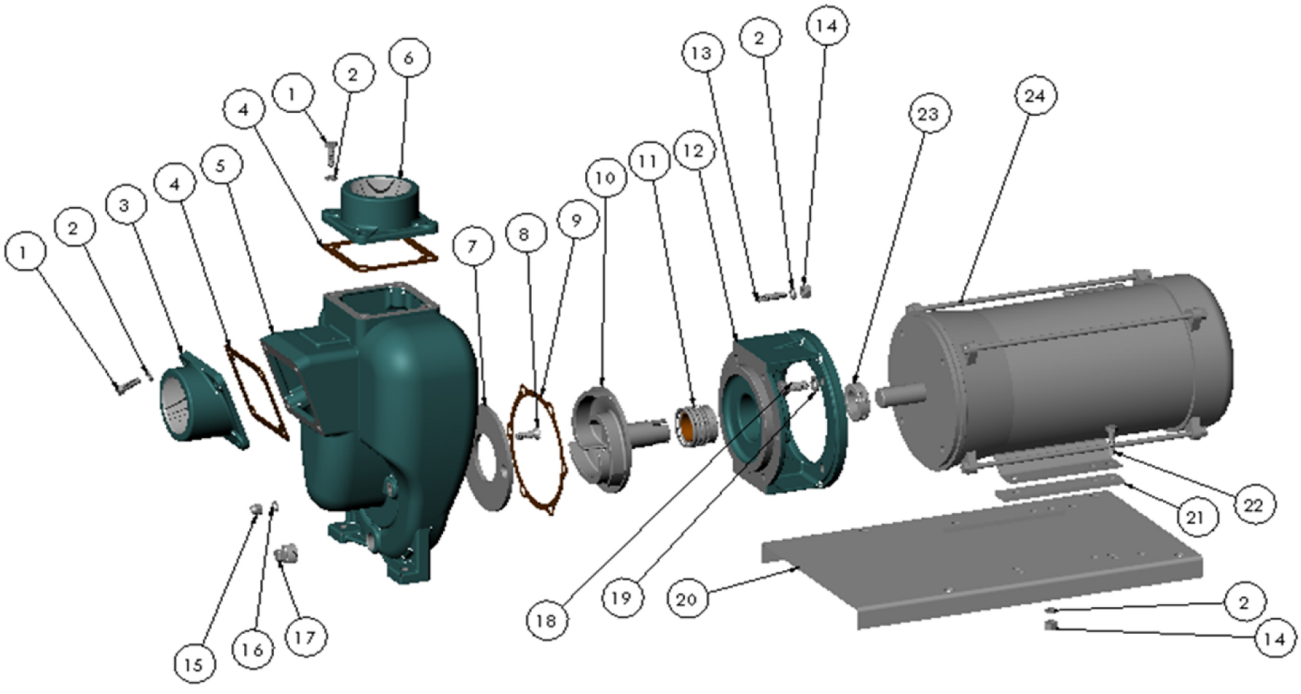

	PART NO.	ITEM NO.	DESCRIPTION	QTY.		PART NO.	ITEM NO.	DESCRIPTION	QTY.
	21291	1	CAPSCREW SS - 3/8-16 X 1.13"	8		21268	14	HEX NUT SS - 3/8-16	10
	21266	2	LOCKWASHER SS 3/8"	18		21263	15	ACORN NUT - 3/6-16	2
	35628	3	SUCTION FLANGE D - 3" NPT	1	*	21271	16	GASKET - 5/8 X 3/8 X 1/16	2
*	35630	4	GASKET CORK/BUNA	2		35650	17	PIPE PLUG SS 3/4 NPT	1
	35625	5	HOUSING DUCTILE	1		21246	18	HEX HD SCREW SS 1/2-13 X 1.25	4
	35629	6	DISCHARGE FLANGE D - 3" NPT	1		21254	19	LOCKWASHER SS - 1/2	4
*	22242	7	WEAR PLATE ALUMINUM	1		22423	20	BASE - ZPS	1
	21262	8	FLAT HD SCR. SS - 3/8-16 X 1.25	2		24710	21	SPACER STL.	2
*	35721	9	GASKET - C-4433	1		21259	22	HEX HD SCREW SS 3/8-16 X 1.38	4
	22499	10	IMPELLER D 5.75" DIA 1.13 I.D.	1		35649	23	CLAMP B	1
*	35651	11	SEAL 1.5" T-2 CAR/SIC/VIT	1		27585	24	EL MTR: 5-3 184TC 3450/2850	1
	35627	12	ADAPTOR DUCTILE	1				EXPLOSION PROOF	
	21261	13	STUD SS - 3/8-16 X 1.63	6					

* SUGGESTED REPLACEMENT PARTS

** COMPATIBLE FOR KEROSENE, JET A/8 & GASOLINE