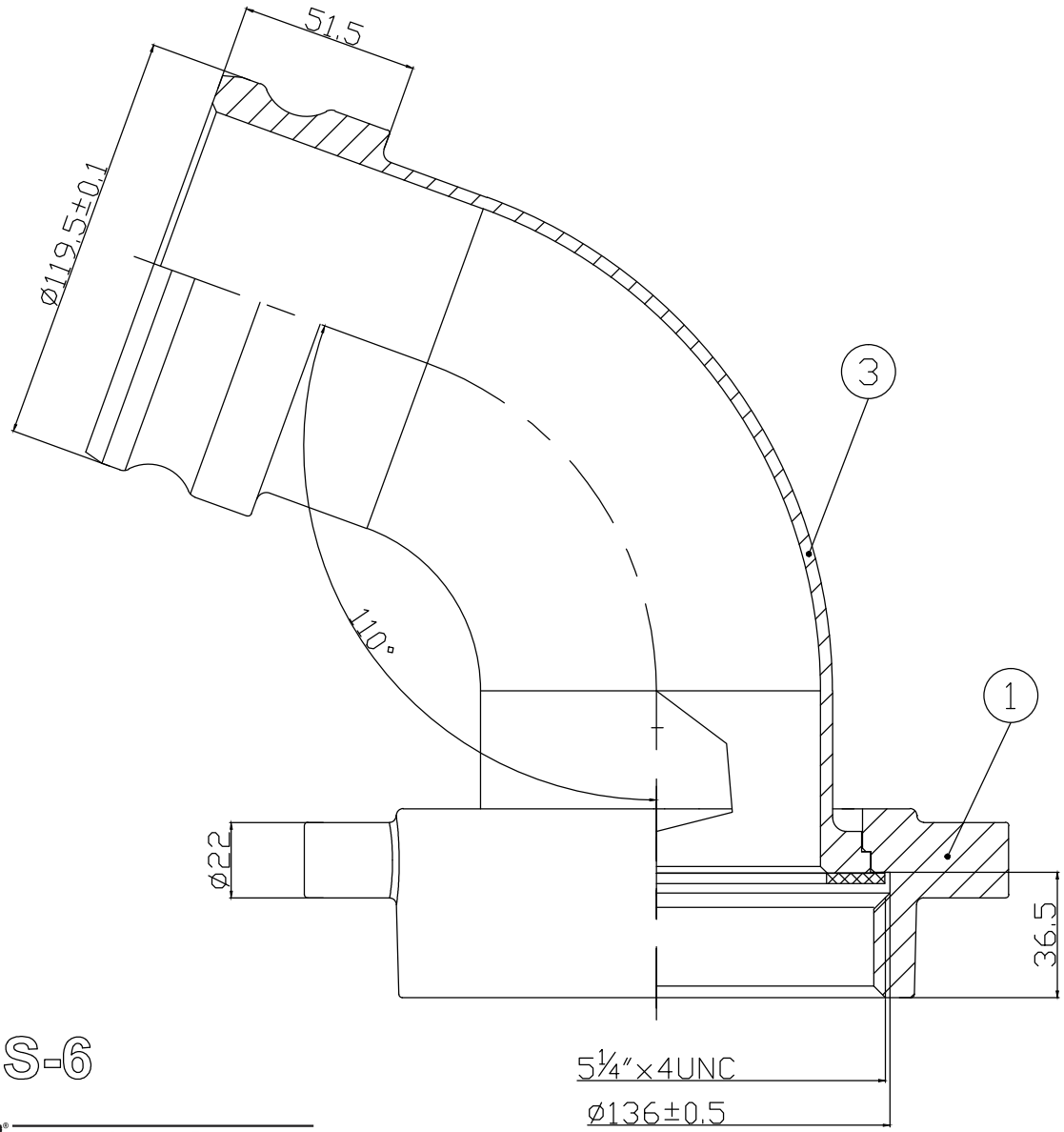

GS-6

JME ELLSWORTH
A John M. Ellsworth Company
John M. Ellsworth Co., Inc.
P.O. Box 240072
8700 West Bradley Road
Milwaukee, WI 53224
800-333-3331 PHONE
info@jmesales.com E-MAIL
www.JMEsales.com WEB

NO	Part Name		QTY	DWG NO.	Size	WT	Remark
3	F DN100 110	A356 T6	1				
2			1				
1	5¼″x4UNC IG NUT AL	A356 T6	1				

Mark	Qty	Modified contents	Signature	Date

DRAWN		2025.03.11	
CHECKED		2025.03.11	
APPROVED			

LXATCA40 AL

Mat'l A356 T6

Page 0/0 A4 SCALE 1:1

DWG No.

Client Part No. LXATCA40

Version A 1 W T