Model: FPWG3100H-J

Gasoline Pressure Washer
OPERATOR'S MANUAL

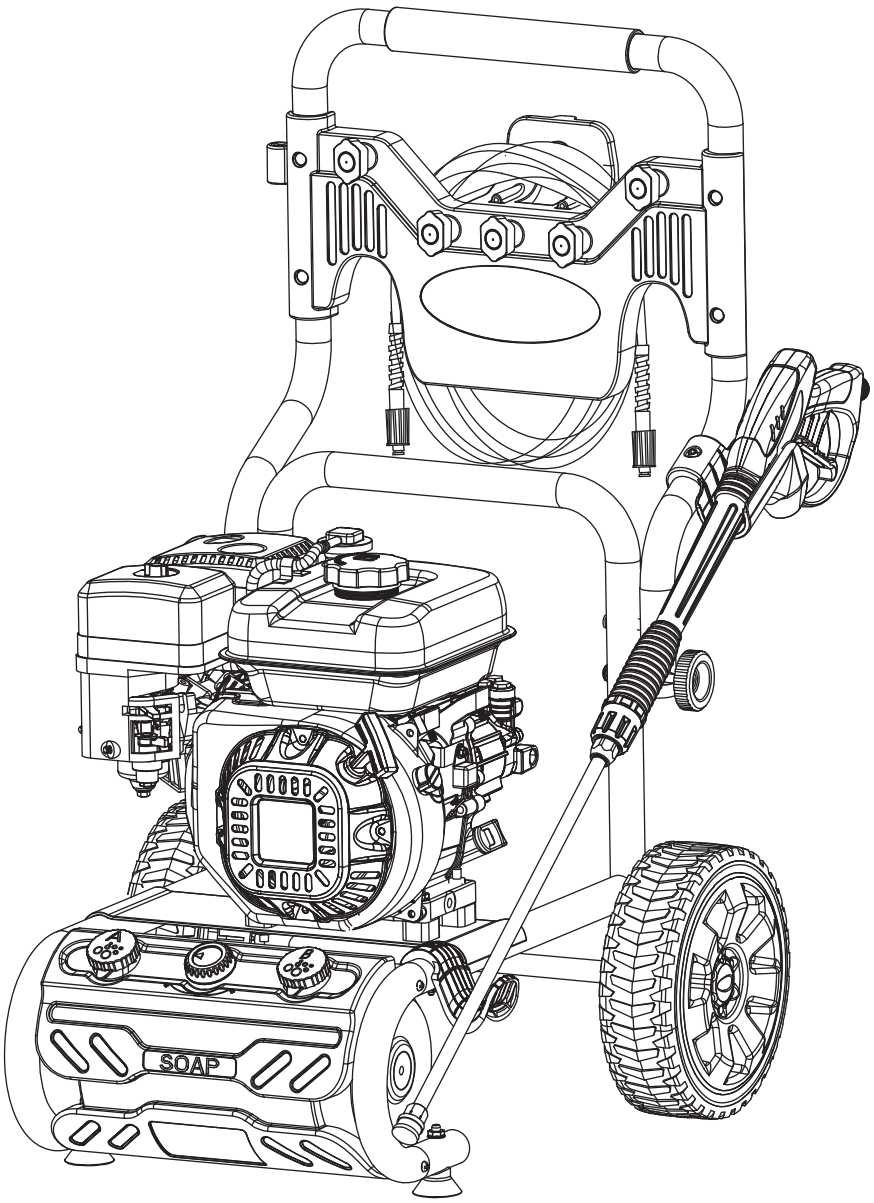

Warning: The Engine Exhaust from this product contains chemicals known to the State of California to cause cancer, birth defects or other reproductive harm.

Official Licensed Product

www.fordpower.cc

TABLE OF CONTENTS

Introduction 3

Safety Rules 4
- Safety Symbols 4
- Safety Instructions 4

Pressure Washer Features 7

Pressure Washer Parts Assembly 8

Pressure Washer Parts List 9

Assembly 10
- Packing List 10
- Unpacking 10
- Attaching Wheels 11
- Attaching Foot Assembly 11
- Raising Handle 11
- Attaching Upper and Lower Gun Hooks 12
- Attaching High Pressure Hose Hook 12
- Attaching Accessory Hook 12
- Attaching Spray Gun 12
- Adding Engine Oil and Fuel 13

Operation 15
- How to Start Pressure Washer 15
- How to Turn Off Pressure Washer 16
- How to Use Spray Gun 16
- Using Spray Nozzle 17
- How to Apply Detergent 17

Maintenance 18
- Pre Operation Steps 18
- After Each Use 18
- Maintenance Schedule 18
- Changing Oil 19
- Engine Maintenance 19
- How to Store 20

Troubleshooting 21

Warranty 22



SAVE THIS MANUAL FOR FUTURE REFERENCE

This manual contains important information regarding safety, operation, and maintenance.

INTRODUCTION

Thank you for purchasing this superior quality pressure washer from Ford Power Equipment. When operating and maintaining this product as instructed in this manual, your pressure washer will give you many years of reliable service.

Product Specifications:
This pressure washer operates at 3100PSI with a flow rate of 2.5 gallons per minute. This high end residential use system features a 208cc engine, no flat foam filled tires, 30' high pressure hose, and 5 quick-connect nozzles.

The emissions control system for this pressure washer is compliant with all standards set by the Environmental Protection Agency.

Product Applications:
- This pressure washer is designed to remove dirt and mold from house siding, decks, garage floors, brick patios, and cement walkways.
- This unit can be used to clean cars, motorcycles, boats, RV's outdoor furniture, lawn equipment, and grills.

How to contact us:
You can contact us by internet at www.fordpower.cc or write to us at:

PULSAR PRODUCTS INC
2051 S. Lynx Place
Ontario, CA 91761

Record the following information bellow for service or warranty assistance.

Date of Purchase:	
Model Number:	
Serial Number:	

SAFETY RULES

Safety Symbols

WARNING! Indicates a potentially hazardous situation which could result in serious injury or death if not avoided.

CAUTION! Indicates a potentially hazardous situation which could result in damage to equipment or property.


Slippery surface


Risk of fire


Risk of explosion


Risk of electric shock


Hot surface


Eye protection

Safety Instructions

The manufacturer cannot anticipate every possible hazardous circumstance that the user may encounter. Therefore, the Warning!s in this manual, on tags, and on affixed decals are not all-inclusive. To avoid accidents, the user must understand and follow all manual instructions and use common sense.

WARNING! **Read and understand this manual in its entirety before operating this pressure washer. Improper use of this pressure washer could result in serious injury or death.**

WARNING!  **Never spray near a power source such as an electrical outlet. Making contact with a power source could cause an electric shock or burn.**

WARNING! **Do not operate indoors or in a confined space preventing dangerous carbon monoxide gas from dissipating.**

- Carbon monoxide gas is a poisonous, odorless gas that can cause headache, confusion, fatigue, nausea, fainting, sickness, seizures, or death. If you start to experience any of these symptoms, **IMMEDIATELY** get fresh air and seek medical attention.
- Never use indoors, in a covered area, or in a confined space, even if doors and windows are open.
- Keep exhaust from this unit from entering a confined area through windows, doors, vents, or other openings.
- When working in areas where vapors could be inhaled, use a respirator mask according to all of its instructions.

SAFETY RULES

WARNING! **To reduce the risk of injection, injury or possible amputation, never direct water pressure towards people or pets.**

- The high pressure stream of water produced can cut through skin and underlying tissue. Never squeeze the trigger or point the spray gun at other people, animals, plants, or fragile objects such as glass, even if the engine is stopped.
- This unit is not a toy. Keep unit away from children and pets.
- Do not leave spray gun unattended while unit is running.
- Make sure the spray gun, nozzle, and accessories are attached correctly.
- Never attempt to repair high pressure hose, always replace.
- Never attempt to repair leaks with sealant, always replace O-ring or seal.
- Never attempt to connect or disconnect hose from pump or spray gun while system is pressurized.
- Always release water pressure from unit every time you stop the engine.

WARNING! **Moving parts can catch on clothing, jewelry, and hair.**

- Do not wear loose clothing or gloves.
- Remove jewelry or anything else that could be caught in moving parts.
- Tie back or wear protective head covering to contain long hair.

WARNING!  **Pressure washer can create puddles and slippery surfaces.**

- Never wear sandals, always wear protective footwear.
- Operate pressure washer from a level and stable surface.
- Do not operate from a ladder, scaffolding, or uneven surface as recoil from spray gun could cause you to fall.
- Use both hands to control spray gun to control recoil.
- Do not over-extend yourself in attempt to reach a little further.

WARNING!   **Keep engine away from flammable objects and other hazardous materials.**

- The fuel and its vapors used to power this unit are highly flammable and could explode resulting in serious injury or death.
- Never overfill fuel tank. If fuel spills, move the unit at least 30 feet away from the spill and wipe up any remaining fuel on the unit before starting the engine.
- Never smoke while operating or fueling this unit.
- Never operate or store this unit near an open flame, heat, or any other ignition source.
- Keep engine free of grass, leaves, or grease which are flammable.
- When adding or draining fuel, unit should be turned off for at least 2 minutes to cool before removing fuel cap. If unit has been running the fuel cap is under pressure, remove slowly.
- To keep fuel from spilling, secure unit so it cannot tip while operating or transporting.
- When transporting unit, disconnect the spark plug wire and make sure the fuel tank is empty with the fuel shutoff valve turned to the off position.

SAFETY RULES

WARNING! **Stay alert and use common sense. Do not operate this unit if you are under the influence of alcohol, drugs, medication or you feel tired.**

WARNING! **Pull cord recoils rapidly and pulls arm towards engine faster than you can let go which could result in injury.**

- Always relieve pressure from spray gun before pulling starter cord, including every failed attempt to start engine.
- To avoid recoil, pull starter cord slowly until resistance is felt, then pull rapidly.

WARNING! **Never operate this unit if there are any broken or missing parts and only use Ford Power Equipment replacement parts specifically designed for this unit.**

- Improper treatment of pressure washer can damage the unit and shorten it's life.
- Always repair this unit as specified in this manual. If you have any questions contact your dealer or consult a qualified service center.
- Never modify this unit in any way or modify governed speed.

WARNING!  **Avoid contacting hot areas of this unit.**

- Use caution around the muffler and other engine parts as they can be extremely hot.
- Allow hot components to cool before touching.

WARNING! **Only use this unit as it is intended or serious injury or death could result.**

- Do not bypass any safety device. Moving parts are covered with guards. Make sure all protective covers are in place.
- Inspect hoses and connections making sure they are secure before starting engine.
- Use only recommended accessories to avoid damage to this unit.
- Never transport or make adjustments to this unit while it is running.

WARNING!  **Use indirect vented safety goggles designed for wet conditions to protect eyes from injury.**

- Spray from this unit has extreme pressure and can ricochet back splashing water or propelling objects towards eyes.
- Never substitute eye protection with dry condition goggles.

WARNING! **Only use detergents or soaps that are safe to be used with pressure washers. Chemicals which are caustic, such as acids or bleach, can result in serious injury, property damage, damage to pressure washer, or death.**

PRESSURE WASHER FEATURES

A - Five Quick-Connect Spray Tips
B - Fuel Tank and cap
C - Choke
D - Fuel Valve Lever
E - Soap Tank
F - Handle
G - 30’ High Pressure Hose
H - Spray Gun
I - Locking Trigger
J - Pull Cord
K - Engine On/Off Switch
L - Oil Fill and Dipstick
M - No Flat Foam Filled Tires
N - High Pressure Hose Outlet
O - Water Inlet

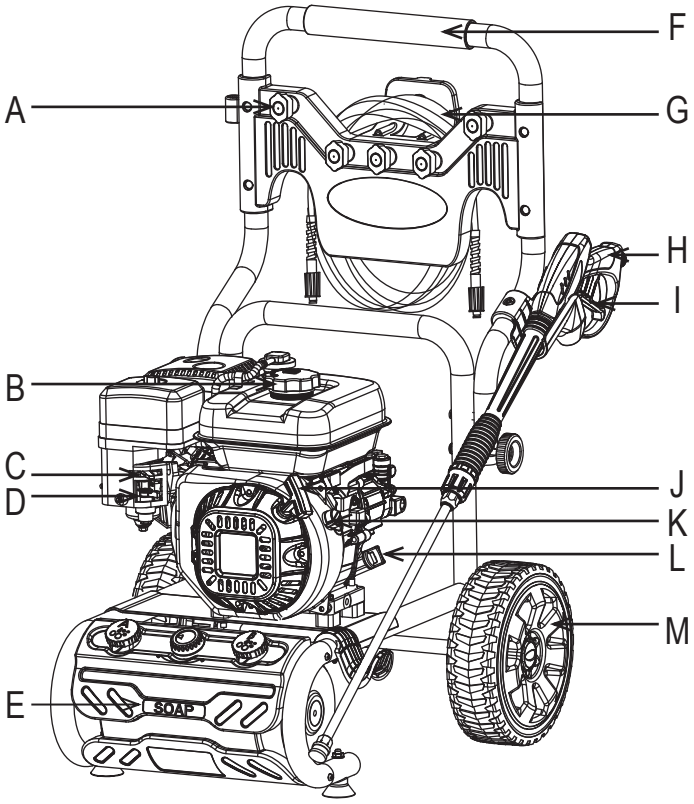

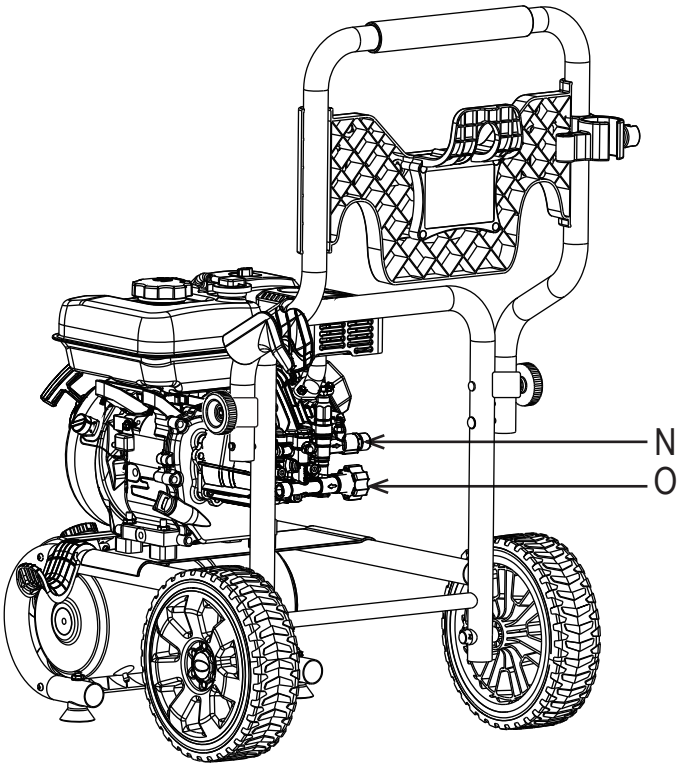

PRESSURE WASHER PARTS ASSEMBLY

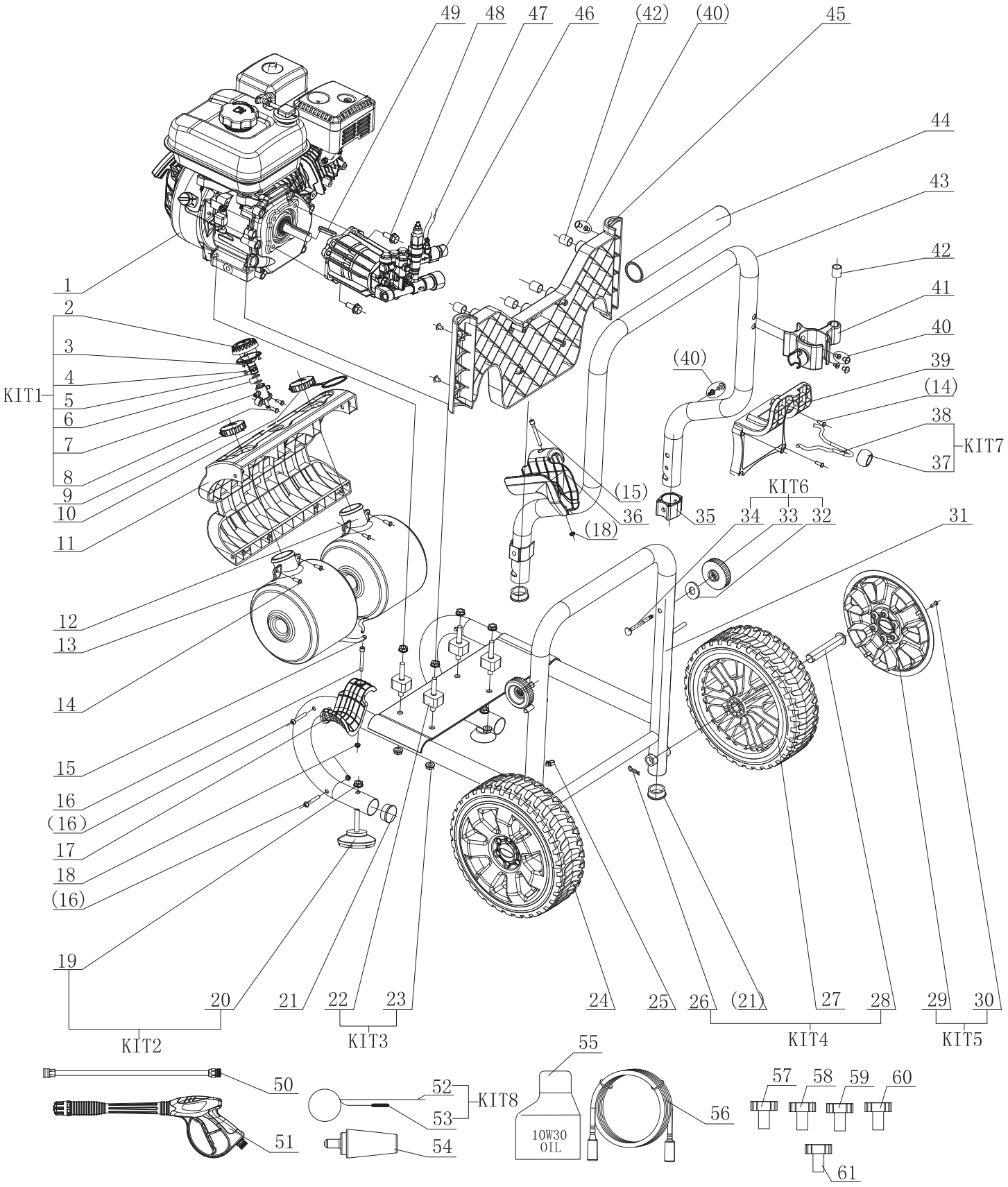

PRESSURE WASHER PARTS LIST

NUMBER	ITEM NAME	QTY
1	208CC Engine	1
2	Selector Knob	1
3	Screw, Self Tapping	3
4	O-Ring	1
5	Valve Spool	1
6	O-Ring	2
7	Valve Body	1
8	Screw, Self Tapping	2
9	Cap, Soap Tank A	1
10	Cap, Soap Tank B	1
11	Panel, Soap Tank	1
12	Soap Tank A	1
13	Soap Tank B	1
14	Screw, Self-Tapping	8
15	Tube, Siphon	2
16	M6 Screw	6
17	Lower Gun Hook	1
18	M6 Lock Nut	6
19	M8 Lock Nut	2
20	Foot, Frame Isolating	2
21	End Cap, Frame	6
22	Engine Mount, Vibration Isolator	4
23	M8 Bolt	8
24	10" Wheel	1
25	Tubing Clip	4
26	Hair Pin	2
27	10" Wheel	1
28	Wheel Axle	2
29	Cap, Wheel	2
30	Screw, Self-Tapping	2
31	Lower "J" Frame Assembly	1
32	Washer	2
33	Thumb Knob Nut	2
34	Pivot Pin	2
35	Handle Pivot Lock	2
36	Upper Gun Hook	1
37	Bungee Cord Knob	1
38	Bungee Cord	1
39	Hook, High Pressure Hose	1
40	Plastic Rivets	7
41	Accessary Hook	1
42	Nozzle Holder	6
43	Handle, "J" Frame	1
44	Foam Grip	1
45	Panel, "J" Frame	1
46	Water Pump	1
47	Siphon Tube	1
48	M8 x 20 Bolt	4
49	Output Shaft Key	1
50	Wand	1
51	Spray Gun	1
52	Nozzle Cleaning Tool	1
53	Holder, Nozzle Cleaning Tool	1
54	Rotating Nozzle	1
55	Container of 10W30 Engine Oil	1
56	High Pressure Hose	1
57	Red Nozzle 0°	1
58	Yellow Nozzle 15°	1
59	Green Nozzle 25°	1
60	White Nozzle 40°	1
61	Black Soap Nozzle	1

ASSEMBLY

Packing List

- Pressure washer
- Quick start guide
- Operator's manual and product registration card
- Spray gun
- Extension wand with quick-connect fitting
- High pressure hose
- Spray nozzles (5) - 0°, 15°, 25°, 40° and soap nozzle
- Wheels (2)
- Hair pins (2), Axles (2), Hub caps (2)
- Spray gun hook (upper)
- Spray gun hook (lower)
- High pressure hose hook
- Accessory hook
- Foot (2)
- 4-Cycle engine oil (SAE10W30)
- Rotating nozzle

WARNING!	**Do not attempt to assemble or operate this pressure washer until you have read and understood this entire manual. If you have any problems assembling or operating this unit contact your dealer or a qualified service center.**

WARNING!	**Do not operate this pressure washer if any of the parts are damaged or missing until the part is replaced. Using this product with damaged or missing parts can cause damage to the machine or result in serious injury or death.**

Unpacking

1. Remove the high pressure hose from box.
2. After the high pressure hose has been removed, carefully open product by cutting down the sides of the box.
3. Remove the product, parts, and all accessories. Make sure all items listed on the packing list are included and not damaged.

ASSEMBLY

Attaching Wheel Assembly (See fig 1)

- Parts needed - 2 hair pins, 2 wheels, 2 axles, 2 hub caps and 2 self-tapping screws.
- Slide the wheel axle pin through hole located in the center of the wheel.
- Raise or tilt pressure washer so you can slide the wheel axle pin into the wheel mounting hole located on the side of the frame.
- Secure the wheel assembly by reinserting a hair pin through hole at the end of the wheel axle and pressing until it locks into place.
- Install the hub cap to the wheel until “Click” and install the self-tapping screw, until the screw is snug.
- Repeat process on the other side of the pressure washer to install the second wheel.

Attaching Foot Assembly (See fig 1)

- Parts needed - 2 foot, 2 M8 lock nuts.
- Raise or tilt pressure washer so you can line up foot with the hole located at the side of the frame opposite the wheel.
- Align the rubber foot with the hole in the frame where the foot is to be located. Attach foot by inserting the bolt from the bottom up and install the acorn nut. Wrench tighten until there is a slight crush on the frame tube. (Do not over tighten)

Raising Handle (See fig 2)

- Raise the handle, then screw the thumb knob nut until it is snug.

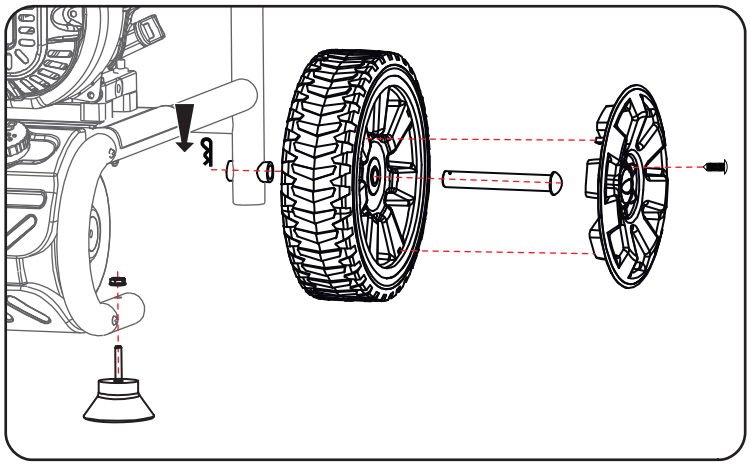

FIG 1

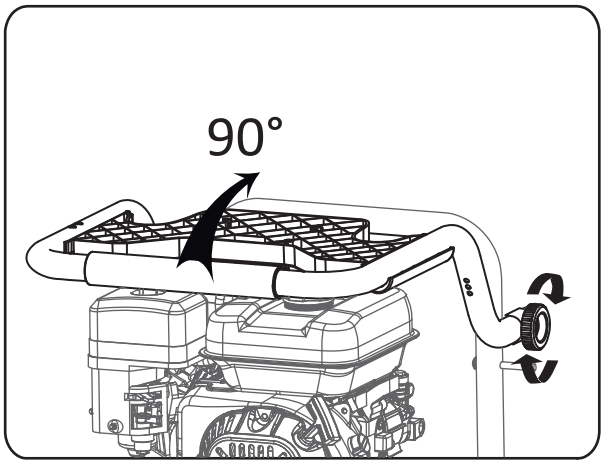

FIG 2

ASSEMBLY

Attaching Upper and Lower Gun Hooks (See fig 3)

- Attach the upper and lower gun hooks.
- Install two M6 screws & the lock nuts, wrench tighten until the nuts are snug.

Attaching High Pressure Hose Hook (See fig 4)

- Align the hole of the high pressure hose hook to hole on the handle bar.
- Install four self-tapping screws, until the screws are snug.

Attaching Accessory Hook (See fig 4)

- Align the accessory hook with the holes.
- Install two plastic rivets, until the plastic rivet is snug.
- Press hard with your finger to lock the rivet.

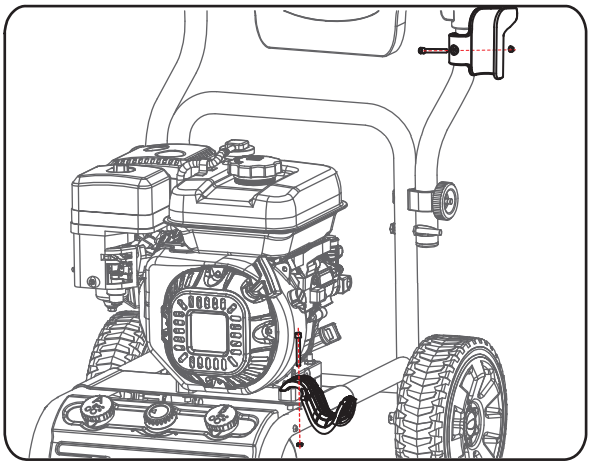

FIG 3

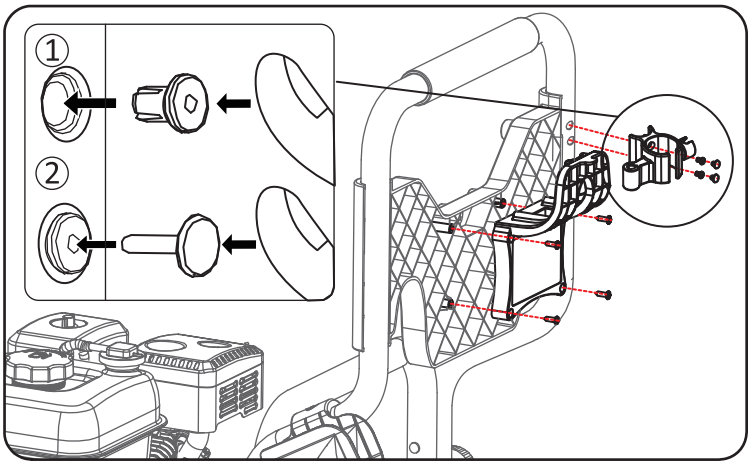

FIG 4

Attaching the Spray Gun (See fig 5 & 6)

- Screw the spray wand and the trigger handle together until they are secure.
- Insert the inlet coupler of the spray hose into the threaded fitting on the high pressure spray gun and thread the black nut on by turning clockwise until it is hand tight.

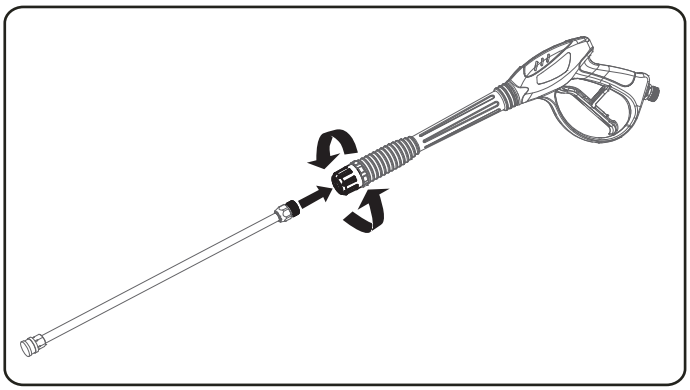

FIG 5

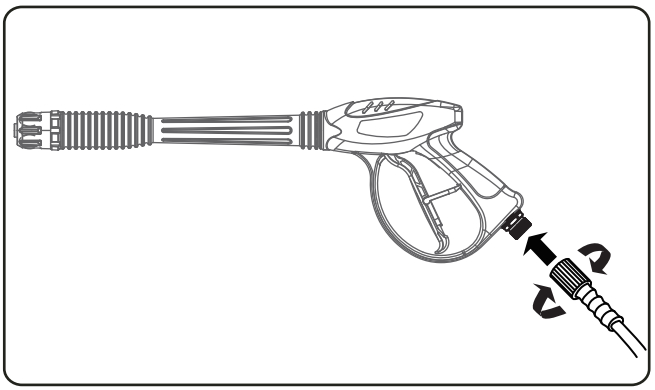

FIG 6

ASSEMBLY

Adding / Checking Engine Oil (See fig 7)

- Place pressure washer on a level surface.
- Remove one or both of the crankcase dipsticks to ensure you do not overfill the engine.
- Carefully add 520 ml (17.6 oz) of 4-Cycle engine oil (SAE10W30) to empty reservoir until oil reaches the outer edge of the oil fill hole (Crankcase Dipstick hole).
- Be sure to replace both dipsticks before attempting to start the engine.
- To check oil, set pressure washer on a level surface, wipe dipstick clean, then reinsert dipstick without re-threading.

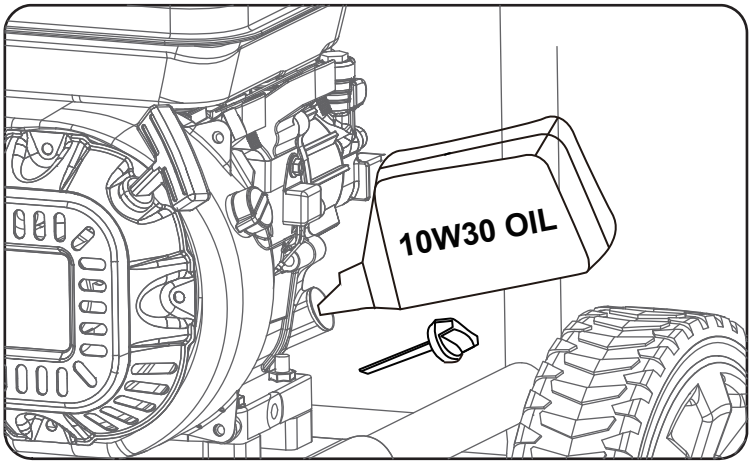

FIG 7

Adding Fuel (See fig 8)

- Set pressure washer on a clean and level surface in an area that is well ventilated.
- Remove fuel cap.
- Insert a funnel into the fuel tank and carefully pour gasoline into the tank until fuel level reaches 1 1/2 inches below the top of the neck.

⚠ CAUTION!	**Oil must be added to unit prior to first use.**

⚠ CAUTION!	**To avoid spillage, do not overfill fuel tank as gasoline expands.**

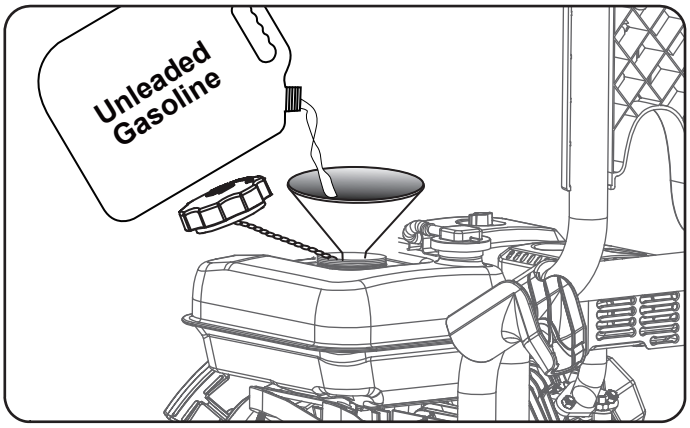

FIG 8

ASSEMBLY

Connecting Garden Hose to Pressure Washer (See fig 9)

- Run water through the hose for a few seconds to flush any debris from the hose.
- Inspect inlet screen and remove any debris.
- Connect hose to water inlet and tighten by hand. There must be a minimum of 10 feet of unrestricted hose between pressure washer and faucet or shut off valve.
- Turn on water.
- Purge the system's pump of air by releasing the safety and squeezing the trigger of the spray gun.

CAUTION! **Do not run pump without connecting to the water supply and turning water on. Failure to do so could damage the pressure washer. Failure to follow these instructions will void product warranty.**

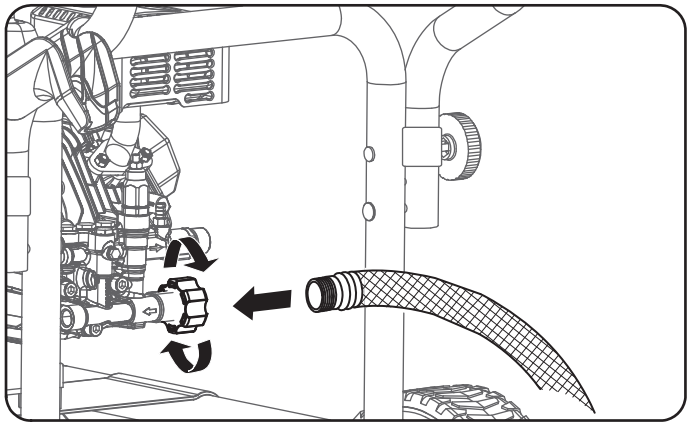

FIG 9

Connect High Pressure Hose to Pump (See Fig 10)

- Attach end of high pressure hose to the high pressure outlet on pump.
- Follow the same procedure with opposite end to attach high pressure hose to spray wand.

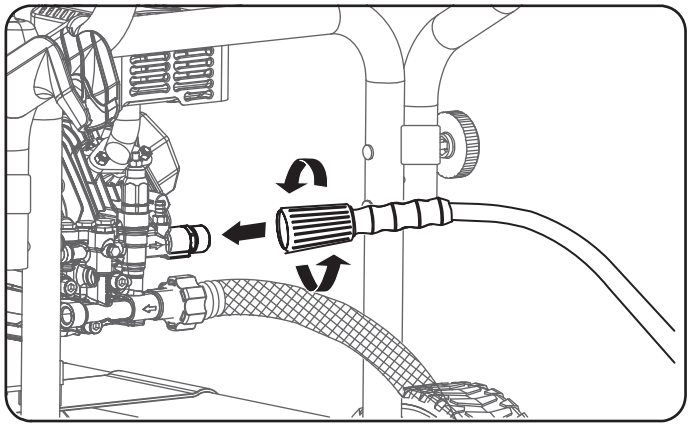

FIG 10

OPERATION

Pre-Operation Check List

- Read and understand this operator manual in its entirety before operating pressure washer.
- Check oil level and add oil to the proper level if low.
- Check fuel level and add fuel if needed.
- Check connections of handle and all hoses to make sure they are secure.
- Check all hoses for kinks and damage.
- Check flow of water supply and make sure it is adequate (40 - 80PSI).

WARNING! **Do not operate indoors or in a confined space preventing dangerous carbon monoxide gas from dissipating.**

- Carbon monoxide gas is a poisonous, odorless gas that can cause headache, confusion, fatigue, nausea, fainting, sickness, seizures, or death. If you start to experience any of these symptoms, **IMMEDIATELY** get fresh air and seek medical attention.
- Never use indoors, in a covered area, or in a confined space, even if doors and windows are open.
- Keep exhaust from this unit from entering a confined area through windows, doors, vents, or other openings.
- When working in areas where vapors could be inhaled, use a respirator mask according to all of its instructions.

CAUTION! **Do not run pressure washer with a damaged hose. Do not run pressure washer without first connecting and turning on water supply or damage to the pressure washer could result. FAILURE TO FOLLOW THESE INSTRUCTIONS WILL VOID PRODUCT WARRANTY.**

Starting Pressure Washer (See Fig 11-12)

- Place pressure washer on a level surface.
- Turn on water.
- Purge the system's pump of air by releasing the safety and squeezing the trigger of the spray gun.
- Attach wand/lance to spray gun.
- Turn fuel valve to the ON position.
- Slide the choke lever to the "Choke" position.
- Turn the engine OFF/ON switch to the "ON" position.
- Holding the machine with your hand, pull the recoil handle (starter cord) slowly until resistance is felt, then pull rapidly. Squeeze the Gun trigger and release the pressure after every failed attempt to start the pressure washer (This will reduce the back pressure).
- Let engine run for several seconds and then gradually slide the choke lever to the RUN position as the engine warms up until the choke is fully slid to the RUN position.

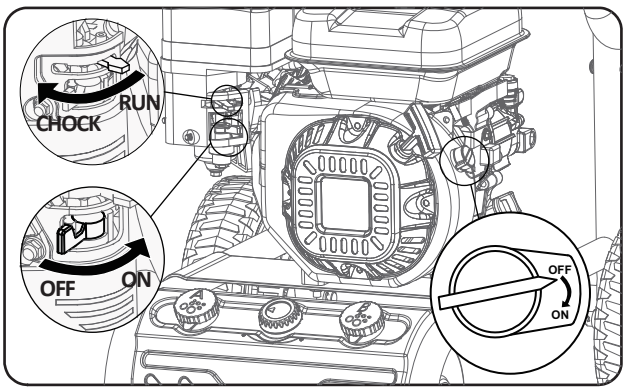

FIG 11

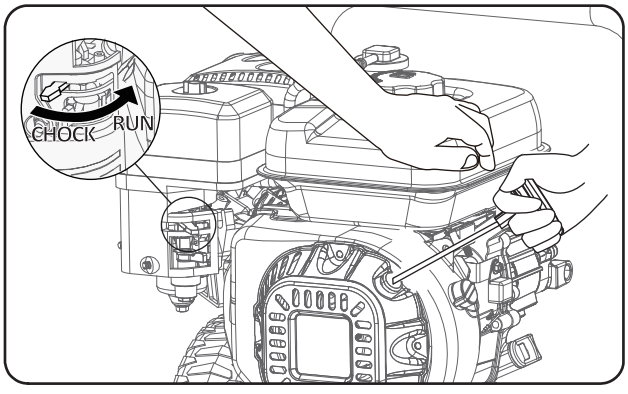

FIG 12

OPERATION

WARNING! **Pull cord recoils rapidly and pulls arm towards engine faster than you can let go which could result in injury.**

- Always relieve pressure from spray gun before pulling starter cord, including every failed attempt to start engine.
- To avoid recoil, pull starter cord slowly until resistance is felt, then pull rapidly.

Stopping Pressure Washer (See Fig 13)

- Turn the on/stop switch to the OFF position.
- Turn the fuel valve to the OFF position.
- Turn off water and squeeze the trigger handle to release all water pressure.

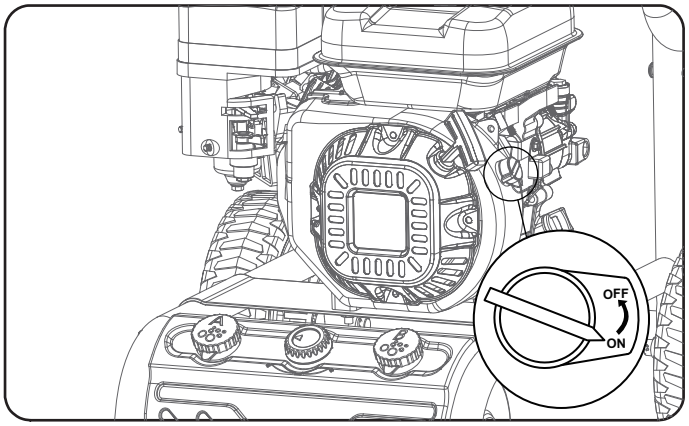

FIG 13

Using the Spray Gun (See Fig 14 - 15)

- Flip the lock tab behind the trigger up or down until it clicks to apply or remove the safety. Pull back on the trigger to begin operating pressure washer.
- To stop water flow, release trigger.

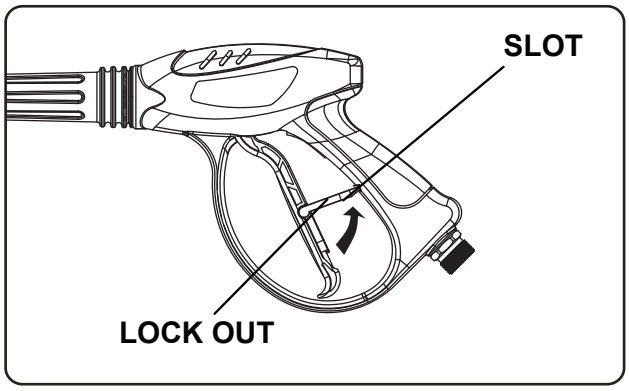

FIG 14

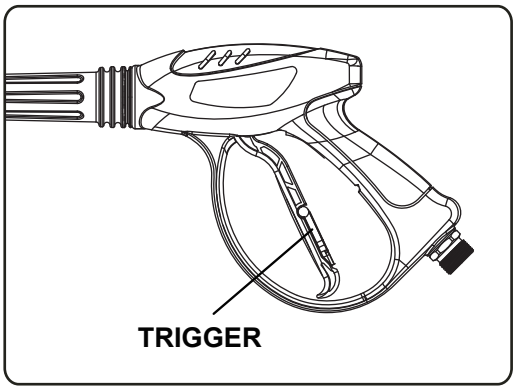

FIG 15

OPERATION

Using Spray Nozzle (See fig 16)

- To connect or disconnect spray tip, pull back on the quick-connect collar. Insert or remove spray tip then release collar.
- When spray tip is connected, pull on the spray tip to make sure it is secured.
- For general cleaning use the 40° spray tip. This option is for cement walkways.
- For stripping, spot cleaning, blasting, and hard to reach areas use the 15° spray tip. This option is for removing paint, rust, mildew, marine growth off boats, or grease stains. This option can be used for reaching second story surfaces, or for the removal of paint, rust, oil stains, tar, gum, and other stubborn substances. Use extreme caution when using this nozzle.
- For applying pressure washer safe detergent, use the black soap nozzle.

Applying Detergent

- Rinse surface with cool water before applying cleaner.
- Prepare detergent as required by job. For best results follow detergent directions as supplied from manufacturer.
- Remove cap from detergent container and fill.
- Spray detergent on surface. For best results use long, even, and overlapping strokes. Allow detergent to set for about 3 minutes before rinsing, but do not allow detergent to dry on surface or it may cause streaking or cause damage to the surface. Use good judgment.
- To clean equipment after use, flush water through the spray nozzle for 1-2 minutes then shut off engine. Soak nozzle in a bucket of clean water to remove detergent.

WARNING!	**Only use detergents or soaps that are safe to be used with pressure washers. Chemicals which are caustic, such as acids or bleach, can result in serious injury, property damage, or death.**

Rinsing with the Pressure Washer

- Test a small area first to avoid surface damage.
- Rinse from top to bottom using long, overlapping strokes.

Moving the Pressure Washer (See fig 17)

- Turn the pressure washer off.
- Tilt unit towards you until it is balanced on its wheels.
- Roll machine to desired location.

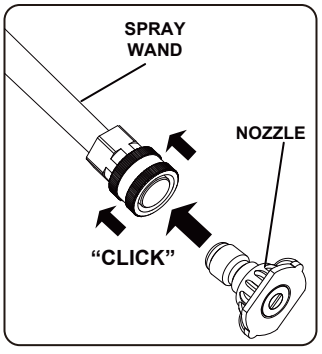

FIG 16

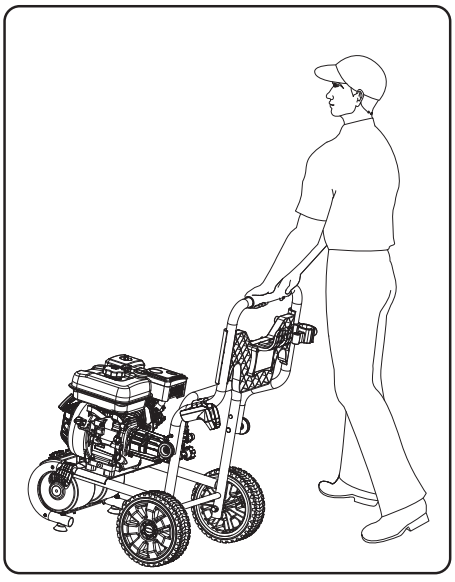
FIG 17

MAINTENANCE

Regular maintenance will extend the life of this pressure washer and improve its performance. The warranty does not cover items that result from operator negligence, misuse, or abuse. To receive full value from the warranty, operator must maintain the pressure washer as instructed in this manual, including proper storage.

WARNING! **Before inspecting or servicing this machine, make sure the engine is off and no parts are moving. Disconnect the spark plug wire and move it away from the spark plug.**

Pre-operation Steps

Before starting the engine, perform the following pre-operation steps:

- Check the level of the engine oil and the fuel tank level.
- Make sure the air filter is clean.
- Remove any debris that has collected on the pressure washer.
- Check water inlet screen for damage. Clean inlet screen if it is clogged.
- Check high pressure hose for damage.
- Briefly run garden hose to flush out any debris or insects.
- Inspect the work area for hazards.

Remove Debris

- Clean any debris that has collected around or behind the muffler, cleaning system, and controls.
- Use a damp cloth to wipe exterior surfaces. If dirt is caked on, use a soft bristle brush.

After Each Use

Follow the following procedure after each use:

- Shut off engine and turn off water supply. Release water pressure by pointing spray gun in a safe direction and squeezing the trigger.
- Disconnect high pressure hose, spray gun, and nozzle. Drain water from items and use a rag to wipe down the outside of the hose and spray gun.
- Empty the water from the pump by pulling the recoil starter 6 times.
- Store unit in a clean and dry area.
- Use of a pressure washer pump conditioner is recommended, follow the instructions provided by the manufacturer of the pump conditioner.

Maintenance Schedule

After First 5 Hours	Change Engine Oil
After Each Use	Check and Clean Water Inlet screen
	Check High Pressure Hose
	Check and Clean Detergent Siphoning Tube
	Check Spray Gun for Leaks
	Clean Debris
	Check Engine Oil Level before starting
Annually (20 hr Use)	Change Engine Oil (Service more often under dirty or dusty conditions)
Annually (50 hr Use)	Check and Clean Air Filter
	Check muffler and spark arrester
Annually (100 hr Use)	Service or Replace Spark Plug

MAINTENANCE

CAUTION! **Risk of injury. If the pressure washer is equipped with a battery, disconnect the battery ground wire before servicing.**

Changing Engine Oil

Engine oil will drain better if the engine is still warm, but not hot.

- Shut off engine.
- Clean the area around the oil fill cap/dipstick to keep out debris then remove oil fill cap/dipstick.
- Place an oil pan on the ground to catch oil. Remove oil plug then tilt pressure washer back and to the side to empty out the oil from the crankcase.
- Once oil is completely drained, return the pressure washer to a level position and install the oil drain plug. Refill the engine with new oil as instructed earlier in this manual under Adding/Checking Oil.

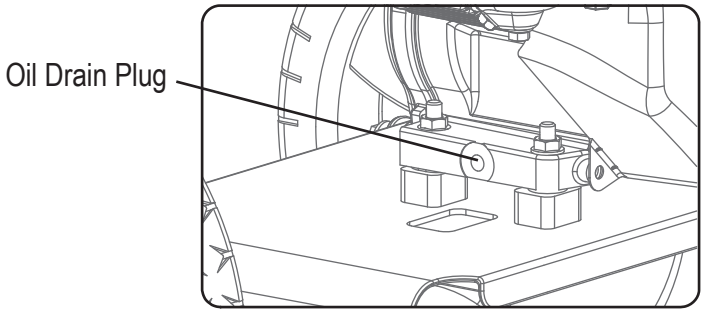

Checking Detergent Siphoning Tube

- Check the detergent siphoning tube for clogs, leaks, or tears.
- Make sure the tube fits tightly to the pump fitting.
- Replace siphoning tubes if damaged.

WARNING! **Never repair high pressure hose or use unit if hose is damaged. If hose is damaged replace with identical Pulsar part.**

High Pressure Hose

- Inspect hose for cuts, bulges, or leaks which can develop from kinking or wear. If damage is found, immediately replace hose.
- Inspect couplings for damage. Immediately replace hose if damage is found.

Spray Gun

- Make sure the spray gun is connected securely.
- Inspect the spray gun safety and make sure the spray gun trigger springs back upon release.

Spray Nozzle

If a pulsing sensation is felt while squeezing the trigger, the spray nozzle may be dirty or clogged and should be cleaned immediately.

- To clean the nozzle, shut off the engine and turn off the water.
- Remove the nozzle from the spray wand making sure that the nozzle is pointing away from you and in a safe direction.
- Use the nozzle cleaner or a small paper clip to dislodge any foreign materials which are clogging or restricting the spray tip.

MAINTENANCE

- Flush debris out of the nozzle by back flushing with a garden hose for 30-60 seconds.
- Reconnect the nozzle to the spray wand.
- Turn the water supply back on and start engine.

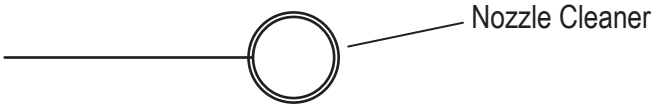

Checking Spark Plug

- Disconnect the spark plug wire from the spark plug.
- Before removing the spark plug, clean the area around its base to prevent debris from entering the engine.
- Clean carbon deposits off the electrode with a wire brush.
- Check the electrode gap and slowly adjust to 0.80mm (0.031in.) if necessary.
- Reinstall spark plug and tighten to Torque 22.0 – 26.9 Nm (16-20 ft-lb).
- Reconnect spark plug wire.
- If spark plug is worn replace only with an equivalent replacement part. Spark plug should be replaced annually.

WARNING! **Water pressure produced by this unit can cut through skin and tissue leading to serious injury and possible amputation.**

- Never attempt to repair high pressure hose, always replace.
- Never attempt to repair leaks with sealant, always replace O-ring or seal.

Repairing Leaking Connections

- Purchase O-Ring / Maintenance kits through the nearest authorized service center and follow instructions provided with kit.

Air Filter

A dirty air filter will reduce the life span of the engine, make starting the engine difficult, and reduce the unit's performance.

- To clean, remove the air filter cover.
- Carefully pull the air filter out by lifting up along the edges.
- Remove dirt from filter by tapping on it or having it blown out.
- Reinstall air filter so that it seals and replace air filter cover.

WARNING! **Storage cover could be flammable. Let engine cool before covering pressure washer.**

Storing Pressure Washer

If storing pressure washer for 30 days or more follow the procedures below:

- Add fuel stabilizer to gasoline to keep gasoline from going stale and to prevent gum deposits from forming on the carburetor. Run engine for a couple of minutes to circulate the fuel stabilizer.
- Add PumpSaver to protect pump from freezing or damage caused by mineral deposits.
- Empty fluid from all hoses and pump.
- Disconnect the spark plug wire and clean the spark plug. Leave spark plug wire disconnected.
- Clean the air filter.
- Cover unit with a suitable protective cover to keep unit dry.
- Store unit in a frost-free area.

TROUBLESHOOTING

PROBLEM	CAUSE	SOLUTION
Engine does not start	1. Out of fuel 2. Engine oil low 3. Spark plug wire disconnected from spark plug 4. Bad spark plug 5. Spark plug wire has shorted 6. Ignition inoperative	1. Fill fuel tank 2. Add engine oil 3. Connect spark plug wire 4. Replace spark plug 5. Contact service center 6. Contact service center
Engine hard to start	1. Stale fuel or water in fuel 2. Spark plug producing weak spark 3. Excessively rich fuel mixture	1. Drain fuel and refill with fresh gasoline 2. Contact service center 3. Contact service center
Engine lacks power and vibrates excessively	1. Dirty air filter	1. Clean air filter
Engine quits during operation	1. Out of fuel	1. Fill fuel tank
Engine loses power when load is added	1. Engine speed is too slow	1. Move throttle to fast. If this does not correct problem, contact service center.
Water pressure is weak	1. Water supply is restricted. 2. Water not turned on to full power 3. Not using high pressure nozzle	1. Inspect garden hose for kinks or leaks. Make sure you are using a large enough garden hose (min. ¾ inch diameter) 2. Open water source all the way. 3. Change nozzle
Detergent and spray do not mix	1. Detergent hose is not submerged or has disconnected 2. Black soap nozzle needed	1. Make sure hose is connected and submerged in the detergent. 2. Install soap nozzle
Pump fails to produce pressure or pressure is inconsistent	1. Water supply is restricted 2. Water not turned on full power 3. Nozzle is clogged 4. Spray gun leaks 5. Air in line 6. Inlet hose screen is clogged 7. Water supply is over 100°F 8. Pump is faulty	1. Inspect garden hose for kinks or leaks. Make sure you are using a large enough garden hose (Min. ¾ inch diameter) 2. Open water source all the way. 3. Clean nozzle 4. Check spray gun connection or replace spray gun 5. Squeeze trigger handle to remove air 6. Clean inlet 7. Use cool water supply 8. Contact service center

WARRANTY

Ford Power Equipment Limited 2 Year Warranty:
From the date of original purchase, Ford Power Equipment warrants to the original purchaser, that each pressure washer sold, shall be free from defect in material and workmanship, for the items and time period set forth below. Ford Power Equipment, at its discretion, agrees to repair or replace any defective part that upon examination, inspection, and testing by a Ford Power Equipment authorized service dealer, is found to be detective within the original warranty period. Ford Power Equipment will also decide upon the use of new or rebuilt parts or comparable product. Any part or product that is replaced will be retained by Ford Power Equipment. This warranty period shall not be extended and any repaired product shall be warranted for the remaining period of the original warranty. The consumer is responsible, and shall prepay all transportation costs, including returning items to the factory or warehouse. This warranty is not transferable and proof of purchase must be presented for requesting warranty service. If a proof-of-purchase receipt is not provided, the product's shipping date by the manufacture will be used to determine the warranty period.

Length of Warranty:
Personal use applications of this pressure washer are warranted for two (2) years. Proof of purchase and of maintenance must be provided.

- Year 1 - Limited comprehensive coverage on all pressure washer components and labor.
- Year 2 - Limited coverage on pressure washer engine and frame, parts only.

"Personal use" means personal residential household use or recreational use by the retail consumer. "Commercial use" means all other uses including commercial, construction, or other income producing purposes. Once a pressure washer has been used for commercial purposes, it shall thereafter be considered as a "commercial use" pressure washer for the purposes of this warranty. Any pressure washer used for commercial use or as rental equipment will not be covered under this warranty.

Consumer Responsibilities:

- Consumer is responsible for carefully reading and following all instructions in the owner's manual. Any product that is damaged due to misuse or abuse will not be covered by this warranty.
- Consumer is responsible for all transportation costs to an authorized Ford Power Equipment Service Center. Unless otherwise requested, ground shipping will be applied for part shipment and customer will pay any additional charges for expedited shipments.
- Consumer is responsible for labor costs associated with warranted repairs twelve (12) months after the purchase date. Labor rates will only be based on normal working hours.
- Consumer is responsible for maintaining pressur e washer as specified in the owner's manual. Docum entation of this maintenance may be required to cover warranty requests.
- Consumer is responsible for presenting any problems with the pressure washer to an authorized Ford Power Equipment Service Center as soon as the problem exists. Warranted repairs will be completed in a reasonable period of time, not to exceed 30 days.

WARRANTY

What this Warranty Does Not Cover:

- **Normal wear:** This warranty excludes normal wear items such as hoses, connector fittings, spray nozzles, wheels, spray wands, soap tanks or buckets, filters, spark plugs, or gaskets unless under normal use, the original equipment is defective in material or workmanship and needs to be replaced prior to the first replacement interval.
- **Maintenance:** This warranty does not apply to tune-ups or routine maintenance and does not cover any adjustments or repairs not performed by an authorized repair facility.
- **Misuse:** This warranty does not apply if your product has failed due to abuse, misuse, neglect, using incorrect fuels or lubricants, contaminated water supply, use of chemicals or detergents not approved or recommended by Ford Power Equipment, improper maintenance, improper storage, unapproved modifications, or has been operated in any way contrary to the instructions found in the products owner's manual.
- **Adverse conditions:** This warranty does not apply if your product has failed due to freezing, accident, or natural disasters.
- **Product Shipment:** This warranty does not apply to damage resulting from shipping, handling, or warehousing: Any damage claims to this product caused by shipment must be filed with freighter.
- **Other exclusions:** This warranty does not apply if your product has been sold "as is" or where the factory applied serial number has been removed. Refurbi shed used, demonstration or floor models are not covered by this warranty.

Where Warranty is Valid:

For warranty coverage, this product must be purchased from an authorized Ford Power Equipment dealer and the warranty only extends to the original purchaser in the United States, Canada, or Mexico. Refurbi shed used, demonstration, or floor models are not covered by this warranty. Products purchased from on-line auction websites, such as ebay, are not covered under this warranty. Products used for commercial use are not covered under this warranty.

How to Obtain Warranty Service:

Take the original receipt and product to the place of purchase or mail the original receipt and product to the address found on the web site if purchased on-line. You can also locate your nearest Ford Power Equipment dealer for service or warranty questions by calling toll free at 1-888-863-7589. Ford Power Equipment recommends you retain all of your receipts covering the purchase and maintenance of your pressure washer, but will not deny you warranty coverage as long as proof of purchase or service can be obtained.

FORD POWER EQUIPMENT'S OBLIGATION UNDER THIS WARRANTY IS EXCLUSIVELY LIMITED TO PRODUCT REPAIR OR REPLACEMENT AND SHALL NOT BE LIABLE FOR ANY INCIDENTAL OR CONSEQUENTIAL DAMAGES INCLUDING BUT NOT LIMITED TO THE EXPENSE OF DELIVERING PRODUCT TO AND FROM REPAIR CENTER, LOSS OR DAMAGE TO PERSONAL PROPERTY, LOSS OF REVENUE, TELEPHONE CHARGES, LOSS OF TIME, OR INCONVENIENCE. SOME STATES, PROVINCES, OR JURISDICTIONS DO NO ALLOW THE EXCLUSION OR LIMITATION OF INCIDENTAL DAMAGES, SO THE ABOVE LIMITATION MAY NOT APPLY TO YOU. THIS WARRANTY GIVES YOU SPECIFIC LEGAL RIGHTS, AND YOU MAY ALSO HAVE OTHER RIGHTS WHICH VARY FROM STATE TO STATE OR PROVINCE TO PROVINCE.