EMCO WHEATON
A Gardner Denver Product

J72 & J79
2" Coupler Repair Kits
(C & D Versions)

Table of Contents

PART NUMBER CONFIGURATION ..... Page 1
KIT DESCRIPTION 2
TERMS & CONDITIONS 97

2" DRY BREAK COUPLERS – VITON SEALS

J72C-AVI0-D 3-4
J72C-AVI1-D 5-6
J72C-AVI1-D003 7-8
J72C-AVI2-D 9-10
J72C-AVI2-D003 11-12
J72C-AVN0-D 13-14
J72C-AVN0-D001 15-16
J72C-AVN0-D002 17-18
J72C-AVN0-D003 19-20
J72C-AVN0-D008 21-22
J72C-AVN1-D 23-24
J72C-AVN1-D001 25-26
J72C-AVN1-D002 27-28
J72C-AVN1-D003 29-30
J72C-AVN2-D 31-32
J72C-AVN2-D001 33-34
J72C-AVN2-D002 35-36
J72C-AVN2-D003 37-38
J72C-SVI0-C 39-40
J72C-SVN0-C 41-42
J72C-SVN0-C010 43-44
J72C-SVN1-C 45-46
J72C-SVN1-C010 47-48

2" DRY BREAK COUPLERS – BUNA SEALS

J72C-ABI0-D 49-50
J72C-ABI1-D 51-52
J72C-ABI1-D003 53-54
J72C-ABI2-D 55-56
J72C-ABI2-D003 57-58
J72C-ABN0-D 59-60
J72C-ABN0-D001 61-62
J72C-ABN0-D002 63-64
J72C-ABN0-D003 65-66
J72C-ABN1-D 67-68
J72C-ABN1-D002 69-70
J72C-ABN1-D003 71-72
J72C-ABN2-D 73-74
J72C-ABN2-D001 75-76
J72C-ABN2-D002 77-78
J72C-ABN2-D003 79-80
J72C-SBI0-C 81-82
J72C-SBN0-C 83-84
J72C-SBN0-C010 85-86
J72C-SBN1-C 87-88

2" DRY BREAK COUPLERS – CHEMRAZ SEALS

J72C-APN0-D 89-90
J72C-SPI0-C 91-92
J72C-SPN0-C 93-94

J79 SERIES COUPLERS

REFERENCE CHART/DRAWING 95-96

DRY-BREAK II™

2-INCH PART NUMBER CONFIGURATION

To Order 2-Inch Products
Configure your part number as shown below.
Sample Part Number: **J72C-AVN0-D001**

Type	Body Material	Seals	Inlet	Swivel	Rev.	Special Features
C=Coupler	A=Aluminum	V=Viton	N=Female NPT	0=Straight (No Swivel)	A	001=90° Handle
A=Adapter	B=Brass	B=Buna	M=Male NPT	1=Straight with Swivel	B	002=SST Trim
	S=Stainless Steel	P=Perfluoroelastomer (Chemraz)	I=ISO 228 Parallel	2=90° with Swivel	C	003=Selective (3-pin)
					D	004=with dust cap
					etc.	008=Selective (2-pin)
						010=4 Notch Version

Note: for 1.5" inlet, use J79 instead of J72.

CRN available for all provinces and territories.

Perfluoroelastomer (Chemraz): -20°F to 450°F (-29°C to 232°C)
Buna: -40°F to 225°F (-40°C to 107°C)
Viton: 5°F to 225°F (-15°C to 204°C)

KIT DESCRIPTION

Emco Wheaton has developed a series of REPAIR KITS suitable for the field repair of the J72 and J79 Series couplers.

Each kit includes an instruction sheets and all components needed to repair the specific wear zone. The part number is prominently displayed for easy stock identification.

Below is a summary of the intended usage for each kit.
All kits include silicone oil, diagram, and instruction sheet.

NOSE SEAL KIT: For replacing the nose seal.

FRONT END KIT: For rebuilding the front end of the coupler.

CROSS SHAFT SEAL KIT: For repairing leaks in the cross shaft area.

SWIVEL SEAL KIT: For repairing seals either on the 90° or straight swivel.

OVERHAUL KIT: For overhauling entire coupler including front end, cross shaft, and swivel.

J72C-AVI0-D DRY BREAK VITON COUPLER KITS

ITEM	QTY	PART #	DESCRIPTION	NOSE SEAL KIT 800413	FRONT END KIT 800175	CROSS SHAFT SEAL KIT 299787	OVERHAUL KIT 801480
1	1	800862	SHAFT				
2	1	490997	LINK & STEM ASSY				
3	1	577635	NOSE PIECE				
4	1	480017	O-RING	■	■		■
5	1	401082	POPPET				
6	1	401110	LEVER				
7	3	401104	BAYONET STUD		■		■
8	1	401087	INTERLOCK PIN				
9	1	563398	BUMPER RING		■		■
10	1	401089	INTERLOCK PLATE				
11	1	470042	SPRING PIN		■		■
12	3	470040	HEX NUT		■		■
13	1	401106	WAVE WASHER		■		■
14	1	800890	WAVE SPRING		■		■
15	1	470043	HEX NUT			■	■
16	1	470061	SPRING PIN			■	■
17	1	565629	GROOVED PIN			■	■
18	1	470045	COTTER PIN	■	■		■
19	1	401096	NOSE SEAL	■	■		■
20	1	577639	GASKET				■
21	1	407878	O-RING			■	■

J72C-AVI0-D
DRY BREAK VITON COUPLER

801468, Rev.A

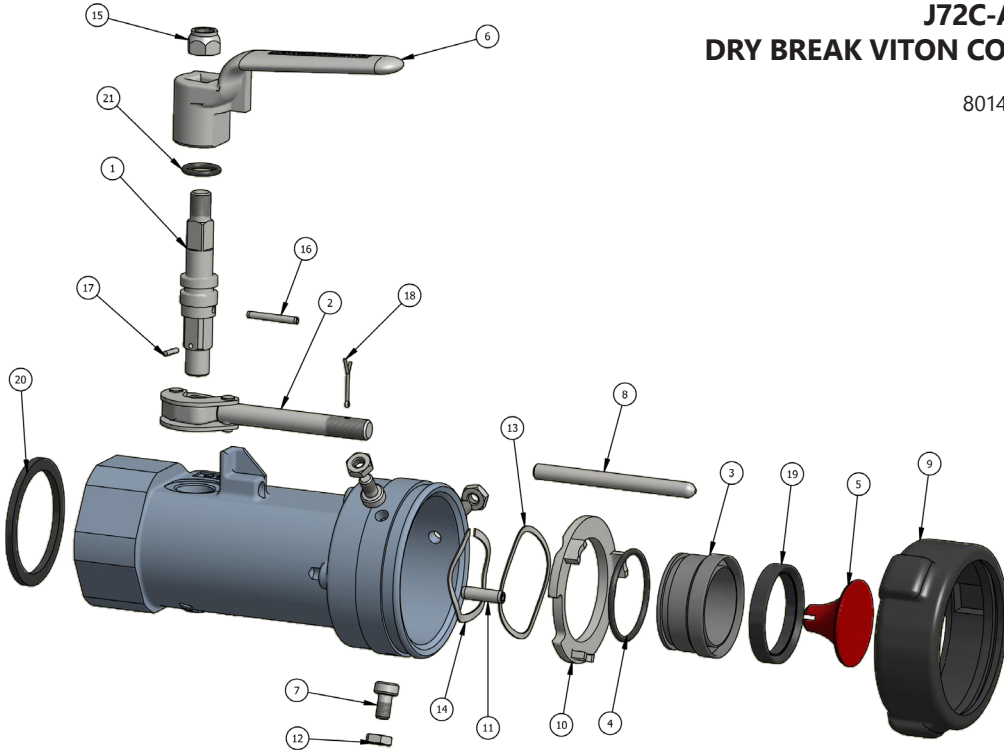

J72C-AVI1-D DRY BREAK VITON COUPLER KITS

ITEM	QTY	PART #	DESCRIPTION	NOSE SEAL KIT 800413	FRONT END KIT 800175	CROSS SHAFT SEAL KIT 299787	SWIVEL SEAL KIT 299537	OVERHAUL KIT 801472
1	1	800862	SHAFT					
2	1	490997	LINK AND STEM ASSY					
3	1	577635	NOSE PIECE					
4	1	401096	NOSE SEAL	■	■			■
5	1	407878	O-RING			■		■
6	1	480017	O-RING	■	■			■
7	1	401082	POPPET					
8	1	401110	LEVER					
9	3	401104	BAYONET STUD		■			■
10	1	401087	INTERLOCK PIN					
11	1	563398	BUMPER RING		■			■
12	1	401089	INTERLOCK PLATE					
13	1	470042	SPRING PIN		■			■
14	3	470040	HEX NUT		■			■
15	1	401106	WAVE WASHER		■			■
16	1	800890	WAVE SPRING		■			■
17	1	470043	HEX NUT			■		■
18	1	470061	SPRING PIN			■		■
19	1	565629	GROOVED PIN			■		■
20	1	470045	COTTER PIN	■	■			■
21	32	470036	BALL BEARING				■*	■*
22	1	401101	BEARING STRIP				■	■
23	1	405276	DUST O-RING				■	■
24	1	407883	PRODUCT O-RING				■	■
25	1	566191	BALL RETAINER				■	■
26	1	299761	SWIVEL BODY					
27	1	299558	SET SCREW				■	■
28	1	577639	GASKET				■	■
29	1	453807	LUBE FITTING N/S				■	■

* -QTY. 6 REPLACEMENT BALLS PROVIDED IN KIT
-LUBE FITTING PROVIDED IN SWIVEL SEAL KIT

J72C-AVI1-D
DRY BREAK VITON COUPLER

801471, Rev.A

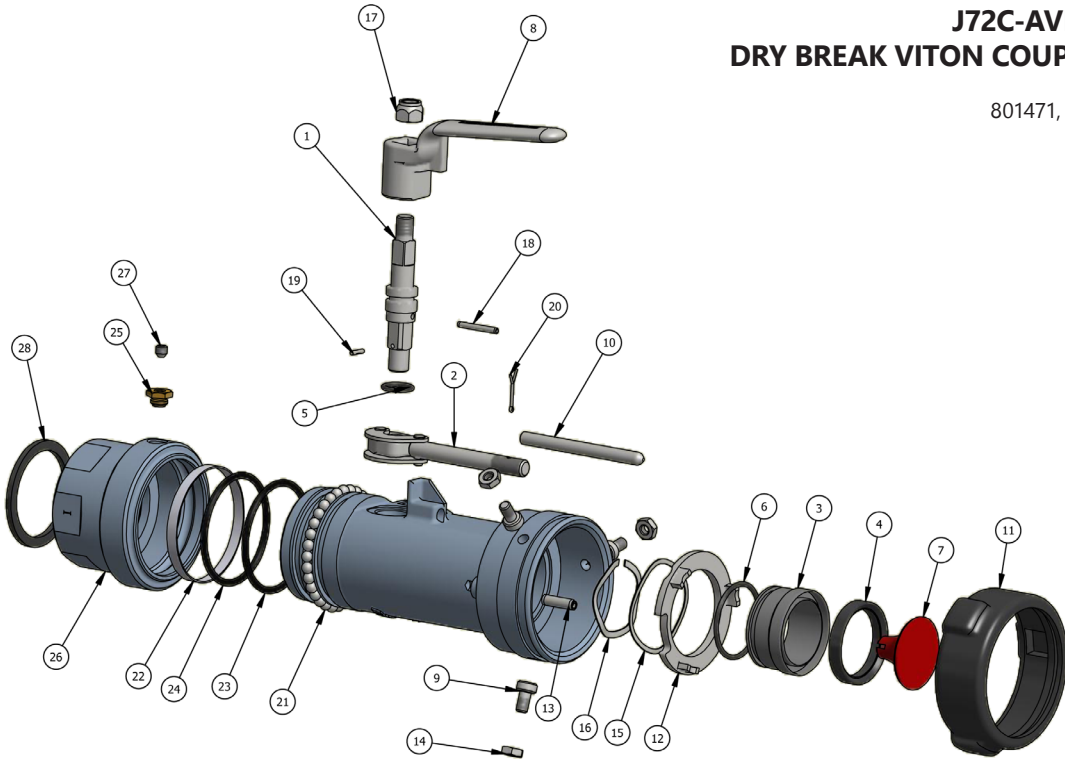

J72C-AVI1-D003 DRY BREAK VITON COUPLER KITS

ITEM	QTY	PART #	DESCRIPTION	NOSE SEAL KIT 800413	FRONT END KIT 800175	CROSS SHAFT SEAL KIT 299787	SWIVEL SEAL KIT 800537	OVERHAUL KIT 801472
1	1	800862	SHAFT					
2	1	490997	LINK & STEM ASSY					
3	1	577635	NOSE PIECE					
4	1	401096	NOSE SEAL	■	■			■
5	1	407878	O-RING			■		■
6	1	480017	O-RING	■	■			■
7	1	401082	POPPET					
8	1	401110	LEVER					
9	3	401104	BAYONET STUD		■			■
10	1	401087	INTERLOCK PIN					
11	1	563398	BUMPER RING		■			■
12	1	401089	INTERLOCK PLATE					
13	1	470042	SPRING PIN		■			■
14	3	470040	HEX NUT		■			■
15	1	401106	WAVE WASHER		■			■
16	1	800890	WAVE SPRING		■			■
17	1	470043	HEX NUT			■		■
18	1	470061	SPRING PIN			■		■
19	1	565629	GROOVED PIN			■		■
20	1	470045	COTTER PIN	■	■			■
21	1	299761	SWIVEL BODY					
22	32	470036	BALL BEARING				■*	■*
23	1	401101	BEARING STRIP				■	■
24	1	405276	DUST O-RING				■	■
25	1	407883	PRODUCT O-RING				■	■
26	1	566191	BALL RETAINER				■	■
27	1	577639	GASKET				■	■
28	3	578010	SCREW					
29	1	299558	SET SCREW				■	■
30	1	453807	LUBE FITTING N/S				■	■

* -QTY. 6 REPLACEMENT BALLS PROVIDED IN KIT
-LUBE FITTING PROVIDED IN SWIVEL SEAL KIT

J72C-AVI1-D003
DRY BREAK VITON COUPLER

801414, Rev.A

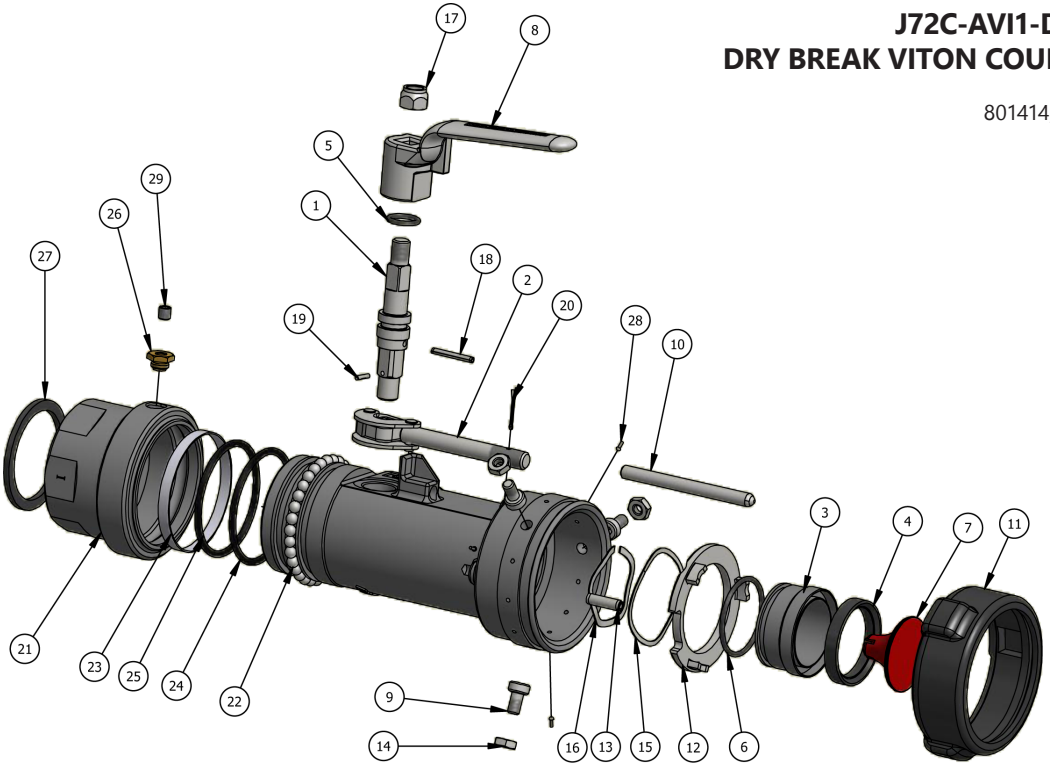

J72C-AVI2-D DRY BREAK VITON COUPLER KITS

ITEM	QTY	PART #	DESCRIPTION	NOSE SEAL KIT 800413	FRONT END KIT 800175	CROSS SHAFT SEAL KIT 299787	SWIVEL SEAL KIT 800536	OVERHAUL KIT 801472
1	1	800862	SHAFT					
2	1	490997	LINK & STEM ASSY					
3	1	577635	NOSE PIECE					
4	1	407878	O-RING			■		■
5	1	480017	O-RING	■	■			■
6	1	401082	POPPET					
7	1	401110	LEVER					
8	3	401104	BAYONET STUD		■			■
9	1	401087	INTERLOCK PIN					
10	1	563398	BUMPER RING		■			■
11	1	401089	INTERLOCK PLATE					
12	1	470042	SPRING PIN		■			■
13	3	470040	HEX NUT		■			■
14	1	401106	WAVE WASHER		■			■
15	1	800890	WAVE SPRING		■			■
16	1	470043	HEX NUT			■		■
17	1	470061	SPRING PIN			■		■
18	1	565629	GROOVED PIN			■		■
19	1	470045	COTTER PIN	■	■			■
20	32	470036	BALL BEARING				■*	■*
21	1	401101	BEARING STRIP				■	■
22	1	405276	DUST O-RING				■	■
23	1	407883	PRODUCT O-RING				■	■
24	1	566191	BALL RETAINER				■	■
25	1	577639	GASKET				■	■
26	1	800141	SWIVEL BODY					
27	1	453807	LUBE FITTING				■	■
28	1	401096	NOSE SEAL	■	■			■

* -QTY. 6 REPLACEMENT BALLS PROVIDED IN KIT

J72C-AVI2-D
DRY BREAK VITON COUPLER

801407, Rev.A

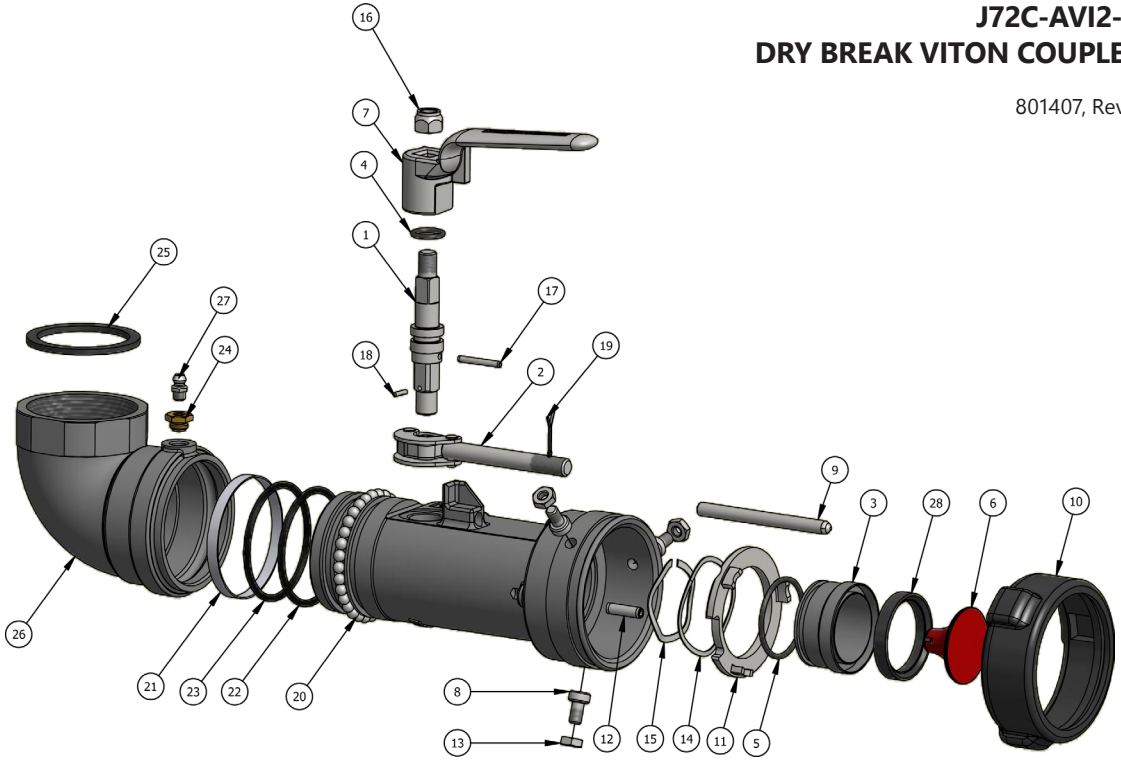

J72C-AVI2-D003 DRY BREAK VITON COUPLER KITS

ITEM	QTY	PART #	DESCRIPTION	NOSE SEAL KIT 800413	FRONT END KIT 800175	CROSS SHAFT SEAL KIT 299787	SWIVEL SEAL KIT 800536	OVERHAUL KIT 801472
1	1	800862	SHAFT					
2	1	490997	LINK AND STEM ASSY					
3	1	577635	NOSE PIECE					
4	1	401096	NOSE SEAL	■	■			■
5	1	407878	O-RING			■		■
6	1	480017	O-RING	■	■			■
7	1	401082	POPPET					
8	1	401110	LEVER					
9	3	401104	BAYONET STUD		■			■
10	1	401087	INTERLOCK PIN					
11	1	563398	BUMPER RING		■			■
12	1	401089	INTERLOCK PLATE					
13	1	470042	SPRING PIN		■			■
14	3	470040	HEX NUT		■			■
15	1	401106	WAVE WASHER		■			■
16	1	800890	WAVE SPRING		■			■
17	1	470043	HEX NUT			■		■
18	1	470061	SPRING PIN			■		■
19	1	565629	GROOVED PIN			■		■
20	1	470045	COTTER PIN	■	■			■
21	32	470036	BALL BEARING				■*	■*
22	1	401101	BEARING STRIP				■	■
23	1	405276	DUST O-RING				■	■
24	1	407883	PRODUCT O-RING				■	■
25	1	566191	BALL RETAINER				■	■
26	3	578010	SCREW					
27	1	800141	SWIVEL BODY					
28	1	577639	GASKET				■	■
29	1	453807	LUBE FITTING				■	■

* -QTY. 6 REPLACEMENT BALLS PROVIDED IN KIT

J72C-AVI2-D003
DRY BREAK VITON COUPLER

801436, Rev.A

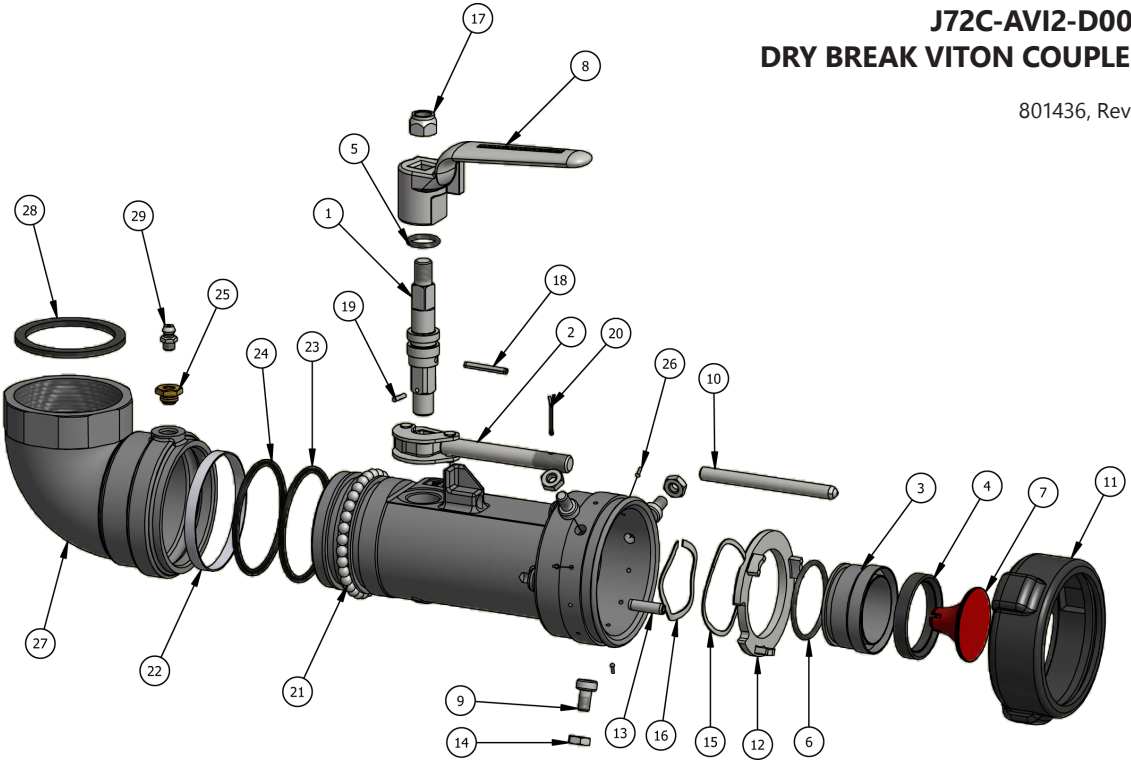

J72C-AVN0-D DRY BREAK VITON COUPLER KITS

ITEM	QTY	PART #	DESCRIPTION	NOSE SEAL KIT 800413	FRONT END KIT 800175	CROSS SHAFT SEAL KIT 299787	OVERHAUL KIT 801469
1	1	800862	SHAFT				
2	1	490997	LINK & STEM ASSY				
3	1	577635	NOSE PIECE				
4	1	480017	O-RING	■	■		■
5	1	401082	POPPET				
6	1	401110	LEVER				
7	3	401104	BAYONET STUD		■		■
8	1	401087	INTERLOCK PIN				
9	1	563398	BUMPER RING		■		■
10	1	401089	INTERLOCK PLATE				
11	1	470042	SPRING PIN		■		■
12	3	470040	HEX NUT		■		■
13	1	401106	WAVE WASHER		■		■
14	1	800890	WAVE SPRING		■		■
15	1	470043	HEX NUT			■	■
16	1	470061	SPRING PIN			■	■
17	1	565629	GROOVED PIN			■	■
18	1	470045	COTTER PIN	■	■		■
19	1	401096	NOSE SEAL	■	■		■
20	1	407878	O-RING			■	■

J72C-AVN0-D
DRY BREAK VITON COUPLER

801404, Rev.A

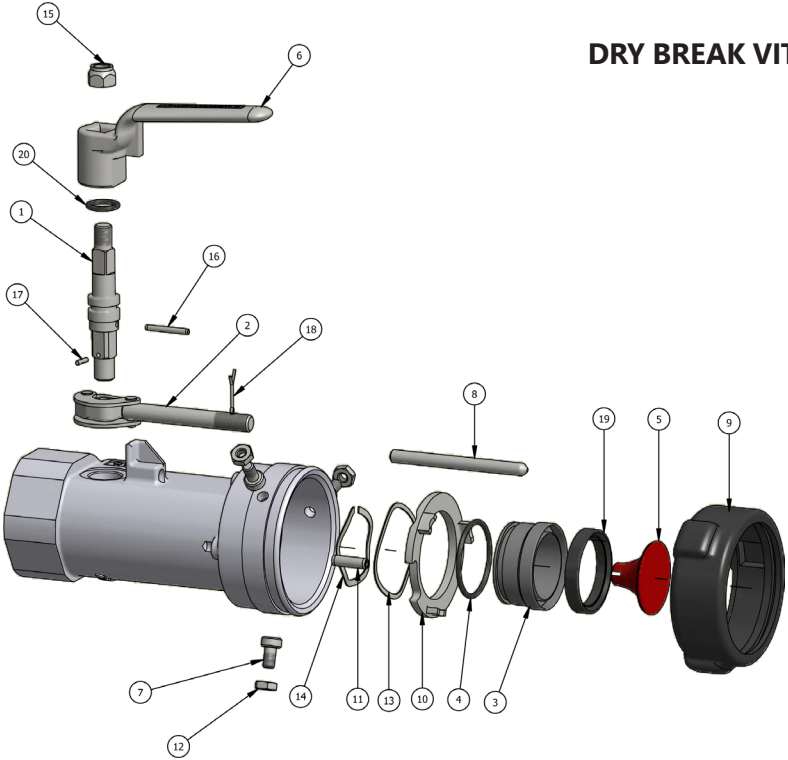

J72C-AVN0-D001 DRY BREAK VITON COUPLER KITS

ITEM	QTY	PART #	DESCRIPTION	NOSE SEAL KIT 800413	FRONT END KIT 800175	CROSS SHAFT SEAL KIT 299787	OVERHAUL KIT 801469
1	1	800862	SHAFT				
2	1	490997	LINK & STEM ASSY				
3	1	577635	NOSE PIECE				
4	1	480017	O-RING	■	■		■
5	1	401082	POPPET				
6	1	405874	LEVER				
7	3	401104	BAYONET STUD		■		■
8	1	401087	INTERLOCK PIN				
9	1	563398	BUMPER RING		■		■
10	1	401089	INTERLOCK PLATE				
11	1	470042	SPRING PIN		■		■
12	3	470040	HEX NUT		■		■
13	1	401106	WAVE WASHER		■		■
14	1	800890	WAVE SPRING		■		■
15	1	470043	HEX NUT			■	■
16	1	470061	SPRING PIN			■	■
17	1	565629	GROOVED PIN			■	■
18	1	470045	COTTER PIN	■	■		■
19	1	401096	NOSE SEAL	■	■		■
20	1	407878	O-RING			■	■

J72C-AVN0-D001
DRY BREAK VITON COUPLER

801449, Rev. A

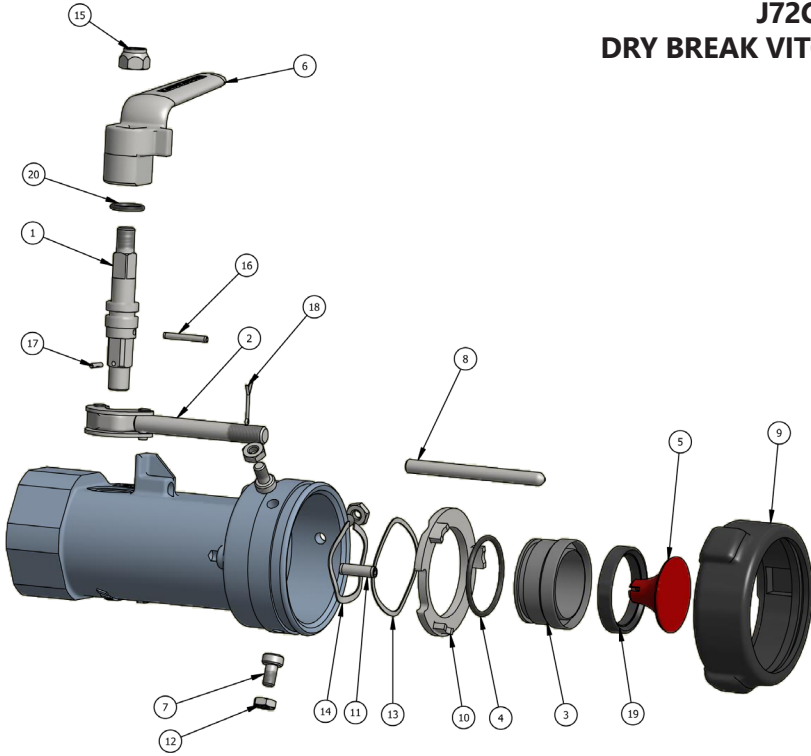

J72C-AVN0-D002 DRY BREAK VITON COUPLER KITS

ITEM	QTY	PART #	DESCRIPTION	NOSE SEAL KIT 800413	FRONT END KIT 800175	CROSS SHAFT SEAL KIT 299787	OVERHAUL KIT 801469
1	1	800862	SHAFT				
2	1	490997	LINK & STEM ASSY				
3	1	401105	NOSE PIECE				
4	1	480017	O-RING	■	■		■
5	1	401117	POPPET				
6	1	401110	LEVER				
7	3	401104	BAYONET STUD		■		■
8	1	401087	INTERLOCK PIN				
9	1	563398	BUMPER RING		■		■
10	1	401089	INTERLOCK PLATE				
11	1	470042	SPRING PIN		■		■
12	3	470040	HEX NUT		■		■
13	1	401106	WAVE WASHER		■		■
14	1	800890	WAVE SPRING		■		■
15	1	470043	HEX NUT			■	■
16	1	470061	SPRING PIN			■	■
17	1	565629	GROOVED PIN			■	■
18	1	470045	COTTER PIN	■	■		■
19	1	401096	NOSE SEAL	■	■		■
20	1	407878	O-RING			■	■

J72C-AVN0-D002
DRY BREAK VITON COUPLER

801445, Rev. A

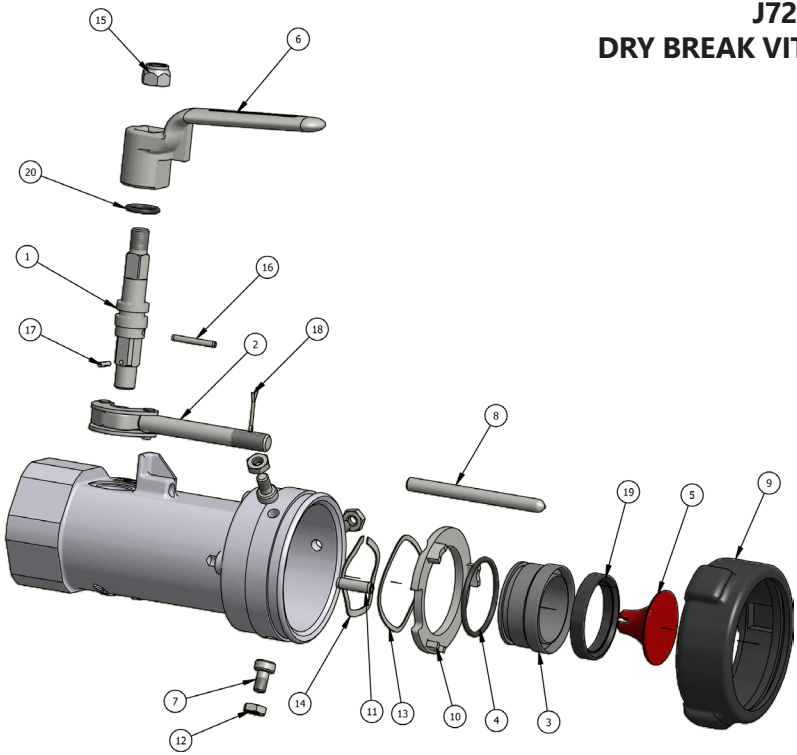

J72C-AVN0-D003 DRY BREAK VITON COUPLER KITS

ITEM	QTY	PART #	DESCRIPTION	NOSE SEAL KIT 800413	FRONT END KIT 800175	CROSS SHAFT SEAL KIT 299787	OVERHAUL KIT 801469
1	1	800862	SHAFT				
2	1	490997	LINK & STEM ASSY				
3	1	577635	NOSE PIECE				
4	1	480017	O-RING	■	■		■
5	1	401082	POPPET				
6	1	401110	LEVER				
7	3	401104	BAYONET STUD		■		■
8	1	401087	INTERLOCK PIN				
9	1	563398	BUMPER RING		■		■
10	1	401089	INTERLOCK PLATE				
11	1	470042	SPRING PIN		■		■
12	3	470040	HEX NUT		■		■
13	1	401106	WAVE WASHER		■		■
14	1	800890	WAVE SPRING		■		■
15	1	470043	HEX NUT			■	■
16	1	470061	SPRING PIN			■	■
17	1	565629	GROOVED PIN			■	■
18	1	470045	COTTER PIN	■	■		■
19	1	401096	NOSE SEAL	■	■		■
20	3	578010	SCREW				
21	1	407878	O-RING			■	■

J72C-AVN0-D003
DRY BREAK VITON COUPLER

801439, Rev.A

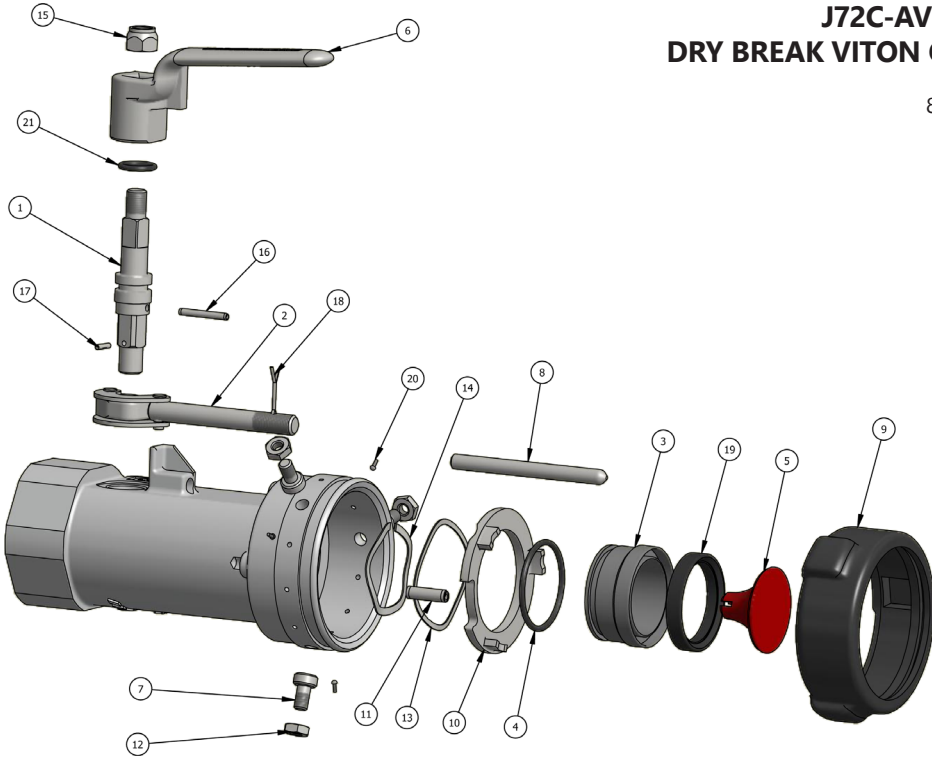

J72C-AVN0-D008 DRY BREAK VITON COUPLER KITS

ITEM	QTY	PART#	DESCRIPTION	NOSE SEAL KIT 800413	FRONT END KIT 800175	CROSS SHAFT SEAL KIT 299787	OVERHAUL KIT 801469
1	1	800862	SHAFT				
2	1	490997	LINK & STEM ASSY				
3	1	401082	POPPET				
4	1	480017	O-RING	■	■		■
5	1	577635	NOSE PIECE				
6	1	401110	LEVER				
7	3	401104	BAYONET STUD		■		■
8	1	401087	INTERLOCK PIN				
9	1	563398	BUMPER RING		■		■
10	1	401089	INTERLOCK PLATE				
11	1	470042	SPRING PIN		■		■
12	3	470040	HEX NUT		■		■
13	1	401106	WAVE WASHER		■		■
14	1	800890	WAVE SPRING		■		■
15	1	470043	HEX NUT			■	■
16	1	470061	SPRING PIN			■	■
17	1	565629	GROOVED PIN			■	■
18	1	470045	COTTER PIN	■	■		■
19	1	401096	NOSE SEAL	■	■		■
20	3	578010	SCREW				
21	1	407878	O-RING			■	■

J72C-AVN0-D008
DRY BREAK VITON COUPLER

801403, Rev.A

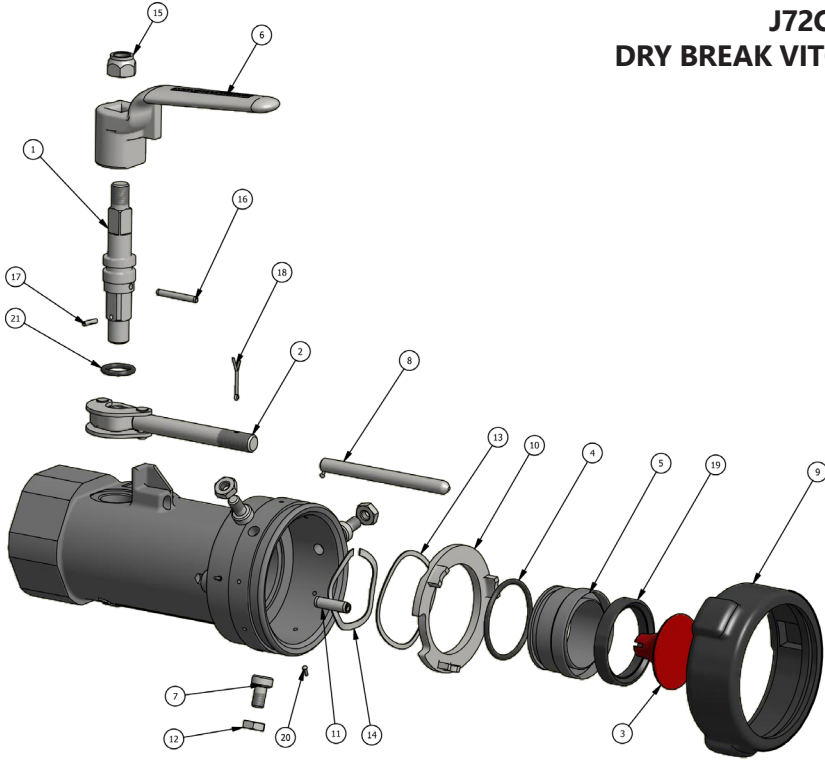

J72C-AVN1-D DRY BREAK VITON COUPLER KITS

ITEM	QTY	PART #	DESCRIPTION	NOSE SEAL KIT 800413	FRONT END KIT 800175	CROSS SHAFT SEAL KIT 299787	SWIVEL SEAL KIT 299802	OVERHAUL KIT 801459
1	1	470043	HEX NUT			■		■
2	1	401110	LEVER					
3	1	407878	O-RING			■		■
4	1	800862	SHAFT					
5	1	565629	GROOVED PIN			■		■
6	1	566191	BALL RETAINIER				■	■
7	1	299745	SWIVEL BODY					
8	1	401101	BEARING STRIP				■	■
9	1	407883	PRODUCT O-RING				■	■
10	1	405276	DUST O-RING				■	■
11	32	470036	BALL BEARING				■*	■*
12	3	401104	BAYONET STUD		■			■
13	3	470040	HEX NUT		■			■
14	1	800890	WAVE SPRING		■			■
15	1	470042	SPRING PIN		■			■
16	1	480017	O-RING	■	■			■
17	1	401106	WAVE WASHER		■			■
18	1	401089	INTERLOCK PLATE					
19	1	401082	POPPET					
20	1	563398	BUMPER RING		■			■
21	1	401096	NOSE SEAL	■	■			■
22	1	577635	NOSE PIECE					
23	1	401087	INTERLOCK PIN					
24	1	490997	LINK & STEM ASSY					
25	1	470045	COTTER PIN	■	■			■
26	1	470061	SPRING PIN			■		■
27	1	299558	SET SCREW				■	■
28	1	453807	LUBE FITTING N/S				■	■

* -QTY. 6 REPLACEMENT BALLS PROVIDED IN KIT
-LUBE FITTING PROVIDED IN SWIVEL SEAL KIT

J72C-AVN1-D
DRY BREAK VITON COUPLER

801375, Rev.A

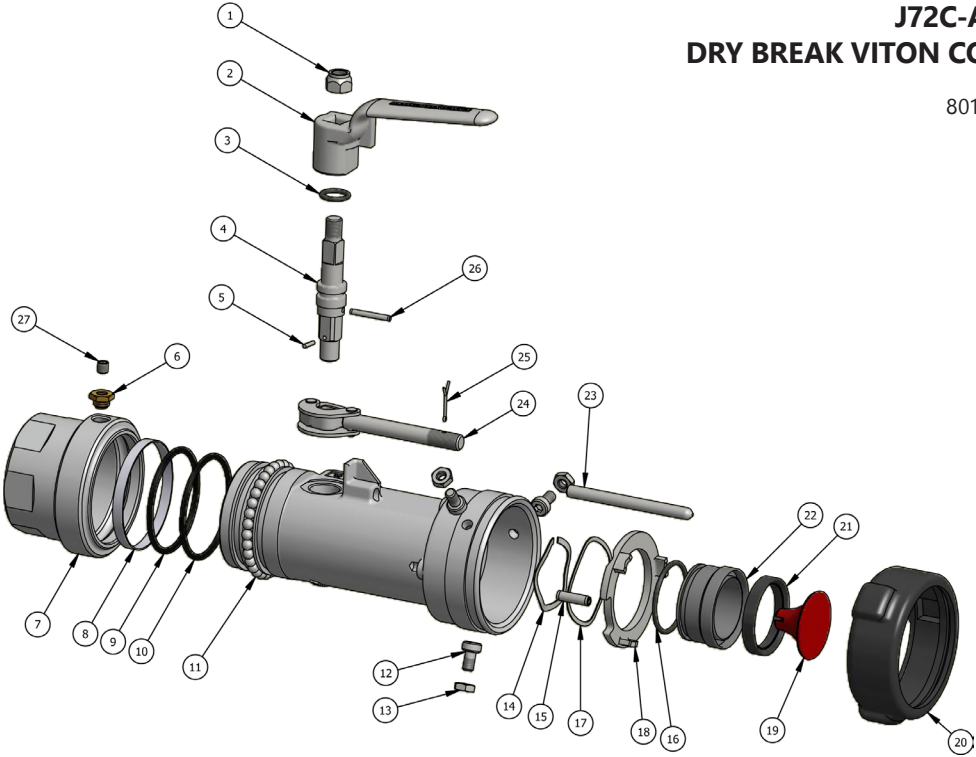

J72C-AVN1-D001 DRY BREAK VITON COUPLER KITS

ITEM	QTY	PART #	DESCRIPTION	NOSE SEAL KIT 800413	FRONT END KIT 800175	CROSS SHAFT SEAL KIT 299787	SWIVEL SEAL KIT 299802	OVERHAUL KIT 801459
1	1	800862	SHAFT					
2	1	490997	LINK & STEM ASSY					
3	1	577635	NOSE PIECE					
4	1	401096	NOSE SEAL	■	■			■
5	1	407878	O-RING			■		■
6	1	480017	O-RING	■	■			■
7	1	401082	POPPET					
8	1	405874	LEVER					
9	3	401104	BAYONET STUD		■			■
10	1	401087	INTERLOCK PIN					
11	1	563398	BUMPER RING		■			■
12	1	401089	INTERLOCK PLATE					
13	1	470042	SPRING PIN		■			■
14	3	470040	HEX NUT		■			■
15	1	401106	WAVE WASHER		■			■
16	1	800890	WAVE SPRING		■			■
17	1	470043	HEX NUT			■		■
18	1	470061	SPRING PIN			■		■
19	1	565629	GROOVED PIN			■		■
20	1	470045	COTTER PIN	■	■			■
21	32	470036	BALL BEARING				■*	■*
22	1	401101	BEARING STRIP				■	■
23	1	405276	DUST O-RING				■	■
24	1	407883	PRODUCT O-RING				■	■
25	1	566191	BALL RETAINER				■	■
26	1	299745	SWIVEL BODY					
27	1	299558	SET SCREW				■	■
28	1	453807	LUBE FITTING N/S				■	■

* -QTY. 6 REPLACEMENT BALLS PROVIDED IN KIT
-LUBE FITTING PROVIDED IN SWIVEL SEAL KIT

J72C-AVN1-D001
DRY BREAK VITON COUPLER

801512, Rev.A

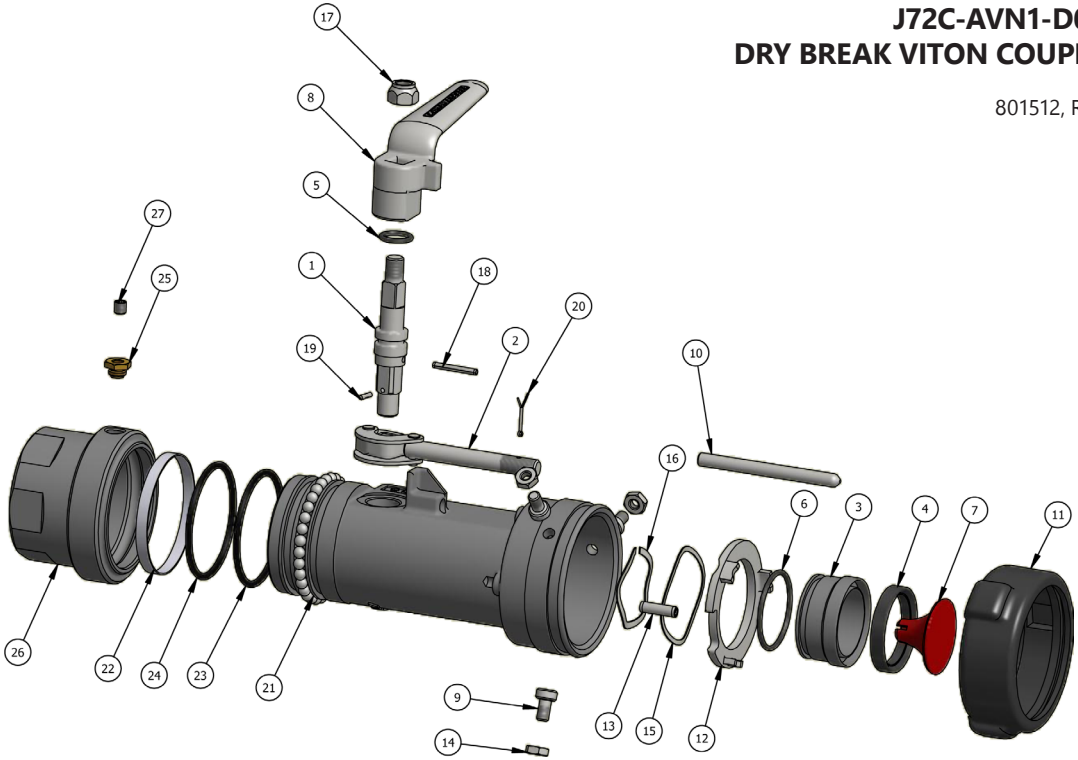

J72C-AVN1-D002 DRY BREAK VITON COUPLER KITS

ITEM	QTY	PART #	DESCRIPTION	NOSE SEAL KIT 800413	FRONT END KIT 800175	CROSS SHAFT SEAL KIT 299787	SWIVEL SEAL KIT 299802	OVERHAUL KIT 801459
1	1	800862	SHAFT					
2	1	490997	LINK & STEM ASSY					
3	1	401105	NOSE PIECE					
4	1	401096	NOSE SEAL	■	■			■
5	1	407878	O-RING			■		■
6	1	480017	O-RING	■	■			■
7	1	401117	POPPET					
8	1	401110	LEVER					
9	3	401104	BAYONET STUD		■			■
10	1	401087	INTERLOCK PIN					
11	1	563398	BUMPER RING		■			■
12	1	401089	INTERLOCK PLATE					
13	1	470042	SPRING PIN		■			■
14	3	470040	HEX NUT		■			■
15	1	401106	WAVE WASHER		■			■
16	1	800890	WAVE SPRING		■			■
17	1	470043	HEX NUT			■		■
18	1	470061	SPRING PIN			■		■
19	1	565629	GROOVED PIN			■		■
20	1	470045	COTTER PIN	■	■			■
21	1	299745	SWIVEL BODY					
22	32	470036	BALL BEARING				■*	■*
23	1	401101	BEARING STRIP				■	■
24	1	405276	DUST O-RING				■	■
25	1	407883	PRODUCT O-RING				■	■
26	1	566191	BALL RETAINER				■	■
27	1	299558	SET SCREW				■	■
28	1	453807	LUBE FITTING N/S				■	■

* -QTY. 6 REPLACEMENT BALLS PROVIDED IN KIT
-LUBE FITTING PROVIDED IN SWIVEL SEAL KIT

J72C-AVN1-D002
DRY BREAK VITON COUPLER

801442, Rev.A

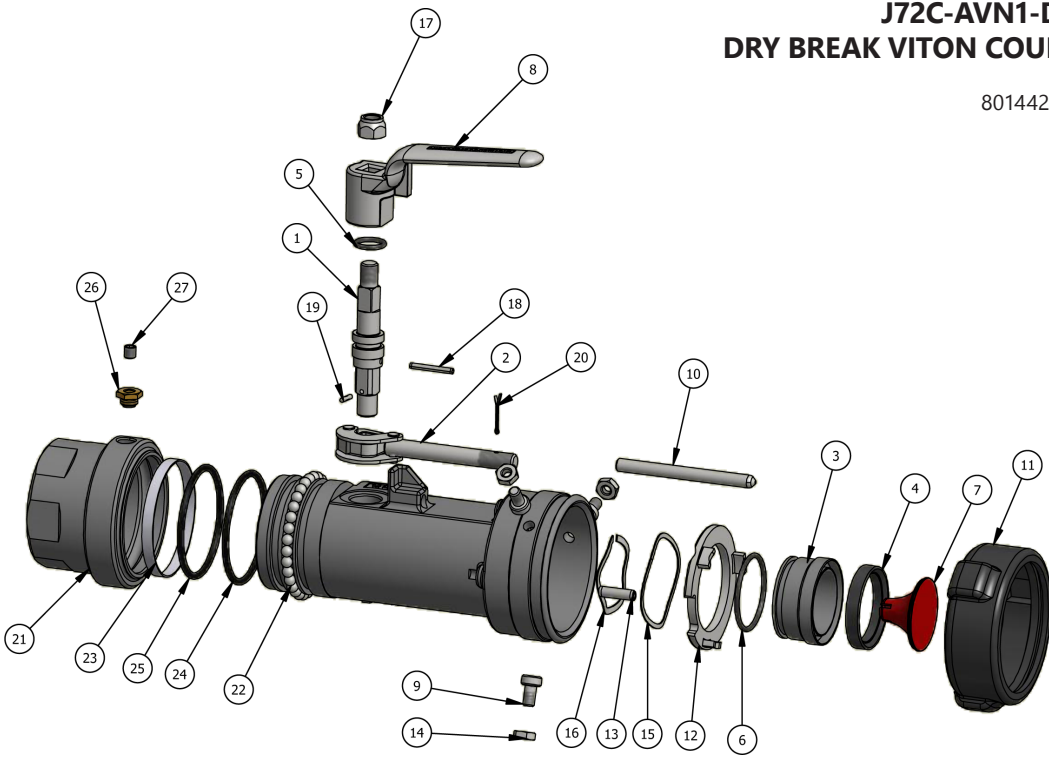

J72C-AVN1-D003 DRY BREAK VITON COUPLER KITS

ITEM	QTY	PART #	DESCRIPTION	NOSE SEAL KIT 800413	FRONT END KIT 800175	CROSS SHAFT SEAL KIT 299787	SWIVEL SEAL KIT 299804	OVERHAUL KIT 801459
1	1	800862	SHAFT					
2	1	490997	LINK & STEM ASSY					
3	1	577635	NOSE PIECE					
4	1	401096	NOSE SEAL	■	■			■
5	1	407878	O-RING			■		■
6	1	480017	O-RING	■	■			■
7	1	401082	POPPET					
8	1	401110	LEVER					
9	3	401104	BAYONET STUD		■			■
10	1	401087	INTERLOCK PIN					
11	1	563398	BUMPER RING		■			■
12	1	401089	INTERLOCK PLATE					
13	1	470042	SPRING PIN		■			■
14	3	470040	HEX NUT		■			■
15	1	401106	WAVE WASHER		■			■
16	1	800890	WAVE SPRING		■			■
17	1	470043	HEX NUT			■		■
18	1	470061	SPRING PIN			■		■
19	1	565629	GROOVED PIN			■		■
20	1	470045	COTTER PIN	■	■			■
21	1	299745	SWIVEL BODY					
22	32	470036	BALL BEARING				■*	■*
23	1	401101	BEARING STRIP				■	■
24	1	405276	DUST O-RING				■	■
25	1	407883	PRODUCT O-RING				■	■
26	1	566191	BALL RETAINER				■	■
27	3	578010	SCREW					
28	1	299558	SET SCREW				■	■
29	1	453807	LUBE FITTING N/S				■	■

* -QTY. 6 REPLACEMENT BALLS PROVIDED IN KIT
-LUBE FITTING PROVIDED IN SWIVEL SEAL KIT

J72C-AVN1-D003
DRY BREAK VITON COUPLER

801432, Rev.A

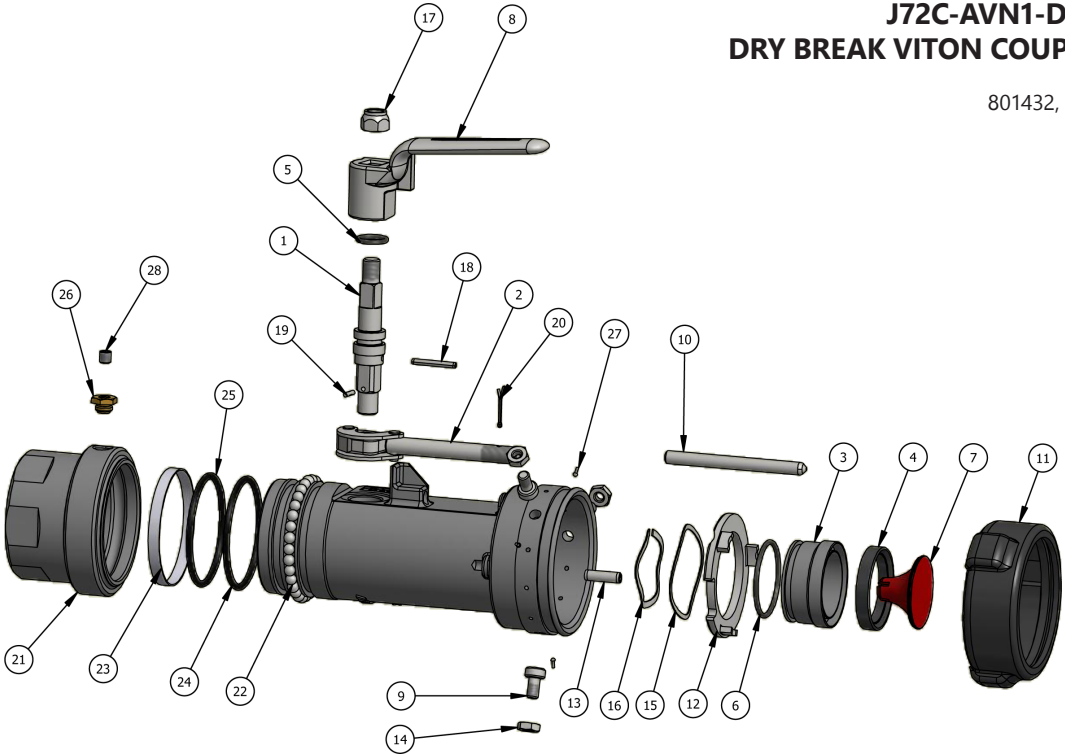

J72C-AVN2-D DRY BREAK VITON COUPLER KITS

ITEM	QTY	PART #	DESCRIPTION	NOSE SEAL KIT 800413	FRONT END KIT 800175	CROSS SHAFT SEAL KIT 299787	SWIVEL SEAL KIT 299804	OVERHAUL KIT 801459
1	1	800862	SHAFT					
2	1	490997	LINK AND STEM ASSY					
3	1	577635	NOSE PIECE					
4	1	401096	NOSE SEAL	■	■			■
5	1	407878	O-RING			■		■
6	1	480017	O-RING	■	■			■
7	1	401082	POPPET					
8	1	401110	LEVER					
9	3	401104	BAYONET STUD		■			■
10	1	401087	INTERLOCK PIN					
11	1	563398	BUMPER RING		■			■
12	1	401089	INTERLOCK PLATE					
13	1	470042	SPRING PIN		■			■
14	3	470040	HEX NUT		■			■
15	1	401106	WAVE WASHER		■			■
16	1	800890	WAVE SPRING		■			■
17	1	470043	HEX NUT			■		■
18	1	470061	SPRING PIN			■		■
19	1	565629	GROOVED PIN			■		■
20	1	470045	COTTER PIN	■	■			■
21	32	470036	BALL BEARING				■*	■*
22	1	401101	BEARING STRIP				■	■
23	1	405276	DUST O-RING				■	■
24	1	407883	PRODUCT O-RING				■	■
25	1	566191	BALL RETAINER				■	■
26	1	401102	SWIVEL BODY					
27	1	453807	LUBE FITTING				■	■

* -QTY. 6 REPLACEMENT BALLS PROVIDED IN KIT

J72C-AVN2-D
DRY BREAK VITON COUPLER

801470, Rev.A

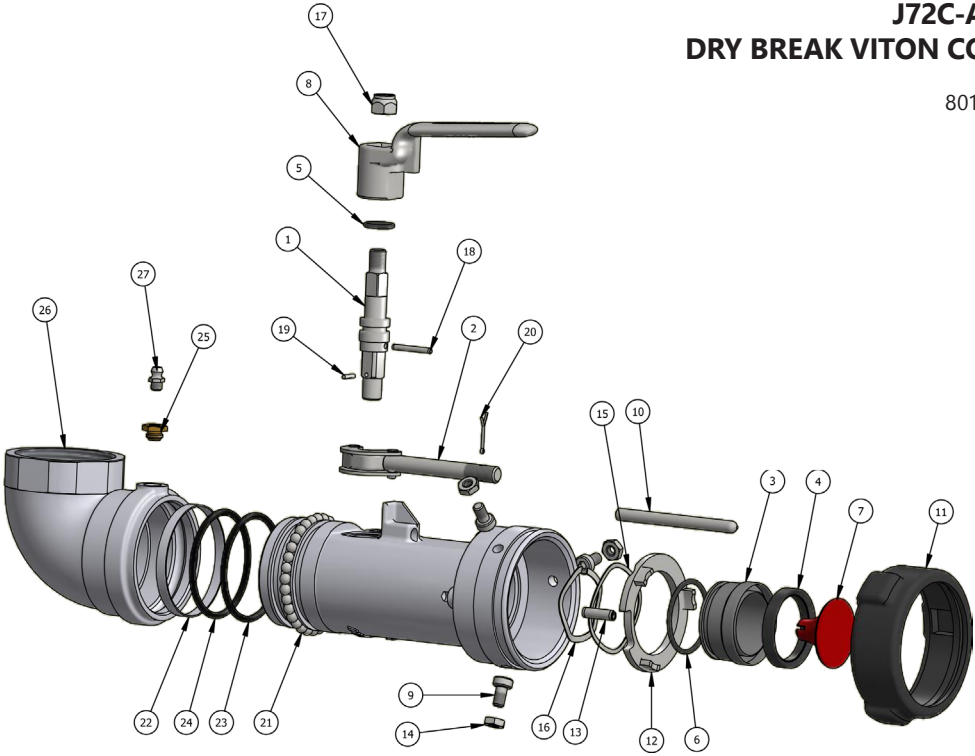

J72C-AVN2-D001 DRY BREAK VITON COUPLER KITS

ITEM	QTY	PART #	DESCRIPTION	NOSE SEAL KIT 800413	FRONT END KIT 800175	CROSS SHAFT SEAL KIT 299787	SWIVEL SEAL KIT 299804	OVERHAUL KIT 801459
1	1	800862	SHAFT					
2	1	490997	LINK & STEM ASSY					
3	1	577635	NOSE PIECE					
4	1	401096	NOSE SEAL	■	■			■
5	1	407878	O-RING			■		■
6	1	480017	O-RING	■	■			■
7	1	401082	POPPET					
8	1	405874	LEVER					
9	3	401104	BAYONET STUD		■			■
10	1	401087	INTERLOCK PIN					
11	1	563398	BUMPER RING		■			■
12	1	401089	INTERLOCK PLATE					
13	1	470042	SPRING PIN		■			■
14	3	470040	HEX NUT		■			■
15	1	401106	WAVE WASHER		■			■
16	1	800890	WAVE SPRING		■			■
17	1	470043	HEX NUT			■		■
18	1	470061	SPRING PIN			■		■
19	1	565629	GROOVED PIN			■		■
20	1	470045	COTTER PIN	■	■			■
21	32	470036	BALL BEARING				■*	■*
22	1	401101	BEARING STRIP				■	■
23	1	405276	DUST O-RING				■	■
24	1	407883	PRODUCT O-RING				■	■
25	1	566191	BALL RETAINER				■	■
26	1	401102	SWIVEL BODY					
27	1	453807	LUBE FITTING				■	■

* -QTY. 6 REPLACEMENT BALLS PROVIDED IN KIT

J72C-AVN2-D001
DRY BREAK VITON COUPLER

801446, Rev.A

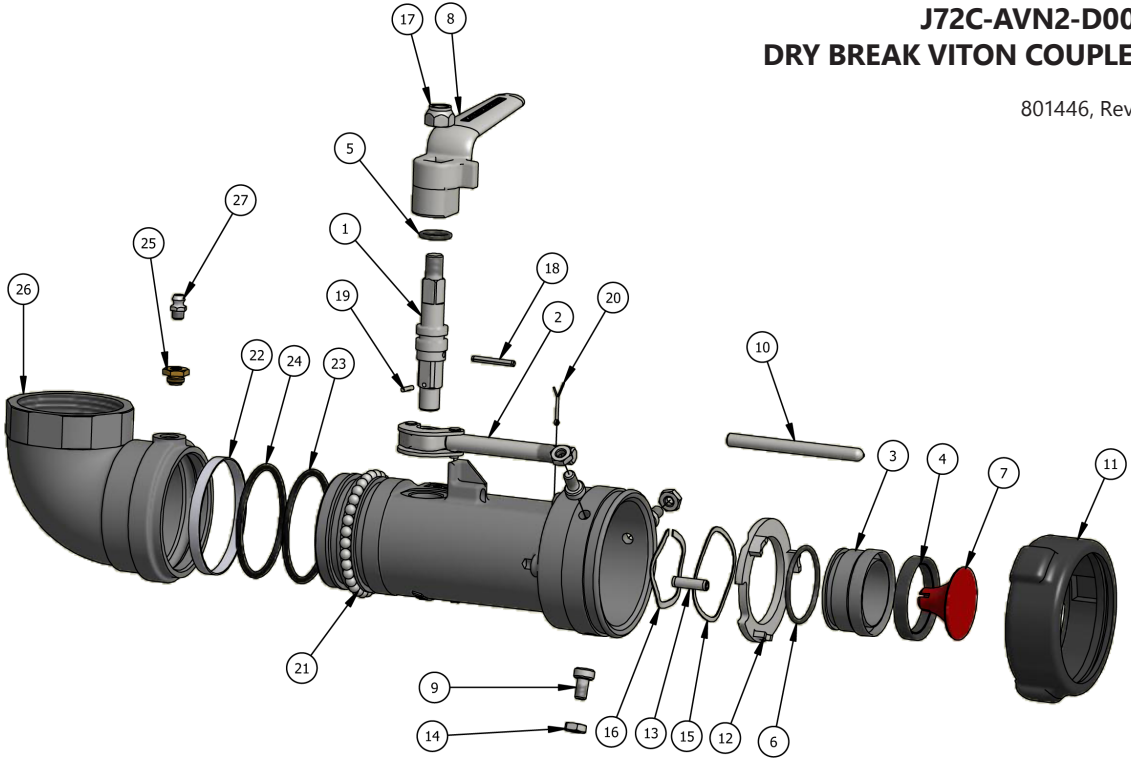

J72C-AVN2-D002 DRY BREAK VITON COUPLER KITS

ITEM	QTY	PART #	DESCRIPTION	NOSE SEAL KIT 800413	FRONT END KIT 800175	CROSS SHAFT SEAL KIT 299787	SWIVEL SEAL KIT 299804	OVERHAUL KIT 801459
1	1	800862	SHAFT					
2	1	490997	LINK & STEM ASSY					
3	1	401105	NOSE PIECE					
4	1	401096	NOSE SEAL	■	■			■
5	1	407878	O-RING			■		■
6	1	480017	O-RING	■	■			■
7	1	401117	POPPET					
8	1	401110	LEVER					
9	3	401104	BAYONET STUD		■			■
10	1	401087	INTERLOCK PIN					
11	1	563398	BUMPER RING		■			■
12	1	401089	INTERLOCK PLATE					
13	1	470042	SPRING PIN		■			■
14	3	470040	HEX NUT		■			■
15	1	401106	WAVE WASHER		■			■
16	1	800890	WAVE SPRING		■			■
17	1	470043	HEX NUT			■		■
18	1	470061	SPRING PIN			■		■
19	1	565629	GROOVED PIN			■		■
20	1	470045	COTTER PIN	■	■			■
21	32	470036	BALL BEARING				■*	■*
22	1	401101	BEARING STRIP				■	■
23	1	405276	DUST O-RING				■	■
24	1	407883	PRODUCT O-RING				■	■
25	1	566191	BALL RETAINER				■	■
26	1	401102	SWIVEL BODY					
27	1	453807	LUBE FITTING				■	■

* -QTY. 6 REPLACEMENT BALLS PROVIDED IN KIT

J72C-AVN2-D002
DRY BREAK VITON COUPLER

801441, Rev.A

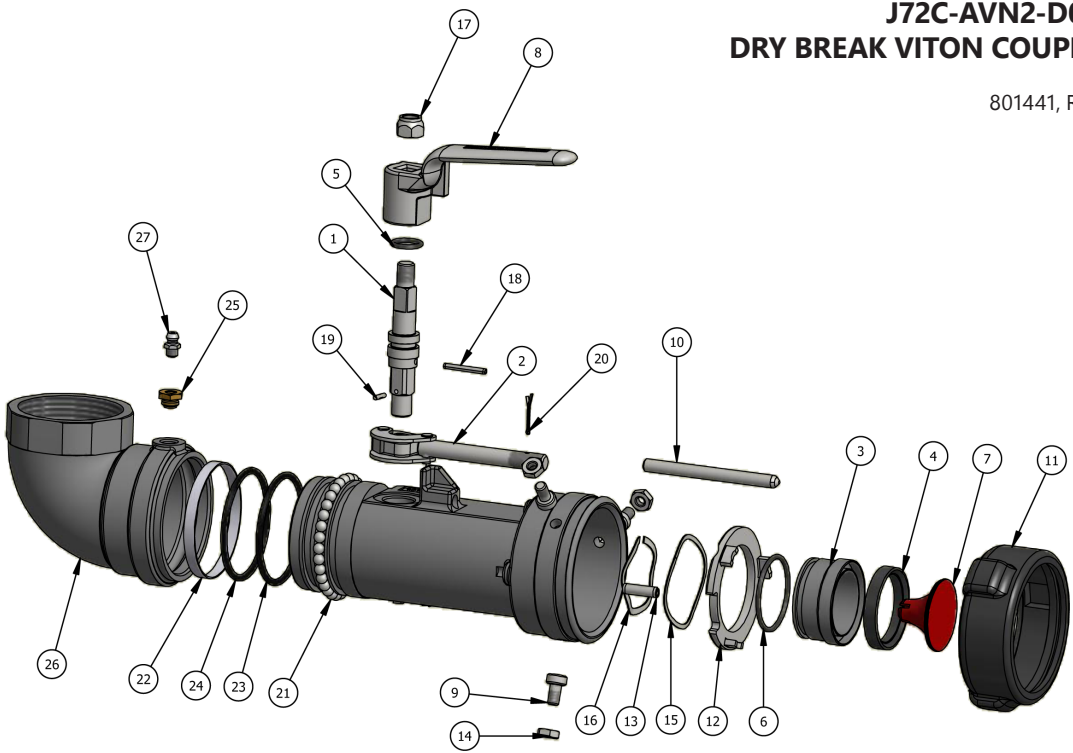

J72C-AVN2-D003 DRY BREAK VITON COUPLER KITS

ITEM	QTY	PART #	DESCRIPTION	NOSE SEAL KIT 800413	FRONT END SEAL KIT 800175	CROSS SHAFT SEAL KIT 299787	SWIVEL SEAL KIT 299804	OVERHAUL KIT 801459
1	1	800862	SHAFT					
2	1	490997	LINK & STEM ASSY					
3	1	577635	NOSE PIECE					
4	1	401096	NOSE SEAL	■	■			■
5	1	407878	O-RING			■		■
6	1	480017	O-RING	■	■			■
7	1	401082	POPPET					
8	1	401110	LEVER					
9	3	401104	BAYONET STUD		■			■
10	1	401087	INTERLOCK PIN					
11	1	563398	BUMPER RING		■			■
12	1	401089	INTERLOCK PLATE					
13	1	470042	SPRING PIN		■			■
14	3	470040	HEX NUT		■			■
15	1	401106	WAVE WASHER		■			■
16	1	800890	WAVE SPRING		■			■
17	1	470043	HEX NUT			■		■
18	1	470061	SPRING PIN			■		■
19	1	565629	GROOVED PIN			■		■
20	1	470045	COTTER PIN	■	■			■
21	32	470036	BALL BEARING				■*	■*
22	1	401101	BEARING STRIP				■	■
23	1	405276	DUST O-RING				■	■
24	1	407883	PRODUCT O-RING				■	■
25	1	566191	BALL RETAINER				■	■
26	3	578010	SCREW					
27	1	401102	SWIVEL BODY					
28	1	453807	LUBE FITTING				■	■

* -QTY. 6 REPLACEMENT BALLS PROVIDED IN KIT

J72C-AVN2-D003
DRY BREAK VITON COUPLER

801435, Rev.A

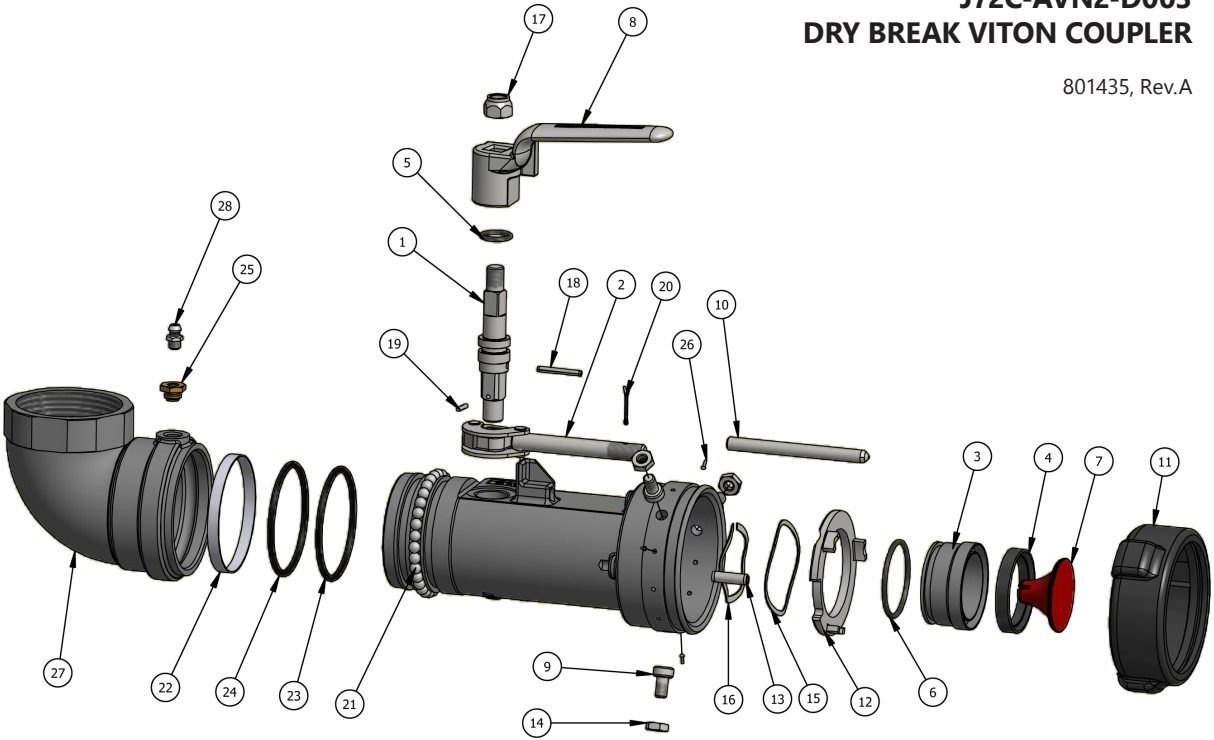

J72C-SVI0-C DRY BREAK VITON COUPLER KITS

ITEM	QTY	PART #	DESCRIPTION	NOSE SEAL KIT 800413	FRONT END KIT 800911	CROSS SHAFT SEAL KIT 800944	OVERHAUL KIT 801483
1	1	299988	LINK & STEM ASSY				
2	1	800860	SHAFT				
3	1	577639	GASKET				■
4	1	800250	BEARING				■
5	1	401110	LEVER				
6	3	401104	BAYONET STUD		■		■
7	3	470040	HEX NUT		■		■
8	1	401087	INTERLOCK PIN				
9	1	401089	INTERLOCK PLATE				
10	1	401106	WAVE WASHER		■		■
11	1	470043	HEX NUT			■	■
12	1	470042	SPRING PIN		■		■
13	1	563398	BUMPER RING		■		■
14	1	470045	COTTER PIN	■	■		■
15	1	299982	BEARING			■	■
16	1	299983	NOSE PIECE				
17	1	480017	O-RING	■	■		■
18	1	800172	WAVE SPRING		■		■
19	1	800861	E-CLIP			■	■
20	1	401096	NOSE SEAL	■	■		■
21	1	401117	POPPET				
22	2	299980	BEARING			■	■
23	1	299970	WASHER			■	■
24	1	407878	O-RING			■	■
25	1	299981	WASHER			■	■

J72C-SVI0-C
DRY BREAK VITON COUPLER

801534, Rev.A

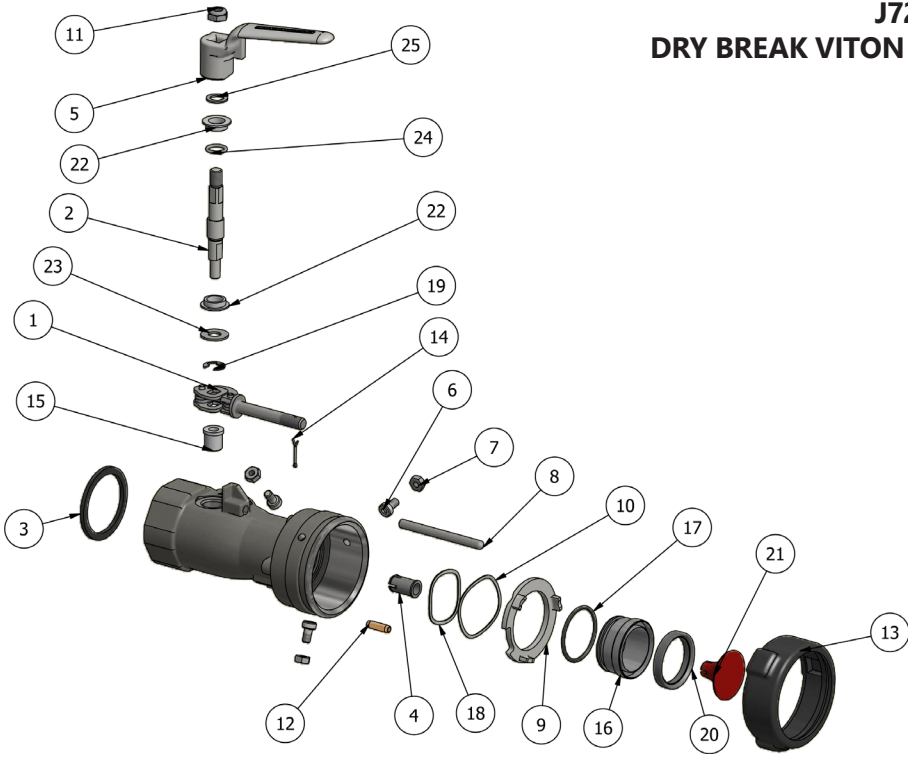

J72C-SVN0-C DRY BREAK VITON COUPLER KITS

ITEM	QTY	PART #	DESCRIPTION	NOSE SEAL KIT 800413	FRONT END KIT 800911	CROSS SHAFT SEAL KIT 800944	OVERHAUL KIT 801484
1	1	299988	LINK & STEM ASSY				
2	1	800860	SHAFT				
3	1	800250	BEARING				
4	1	401110	LEVER				
5	3	401104	BAYONET STUD		■		■
6	3	470040	HEX NUT		■		■
7	1	401087	INTERLOCK PIN				
8	1	401089	INTERLOCK PLATE				
9	1	401106	WAVE WASHER		■		■
10	1	470043	HEX NUT			■	■
11	1	470042	SPRING PIN		■		■
12	1	563398	BUMPER RING		■		■
13	1	470045	COTTER PIN	■	■		■
14	1	299982	BEARING			■	■
15	1	299983	NOSE PIECE				
16	1	480017	O-RING	■	■		■
17	1	800172	WAVE SPRING		■		■
18	1	800861	E-CLIP			■	■
19	1	401096	NOSE SEAL	■	■		■
20	1	401117	POPPET				
21	2	299980	BEARING			■	■
22	1	299970	WASHER			■	■
23	1	407878	O-RING			■	■
24	1	299981	WASHER			■	■

J72C-SVN0-C
DRY BREAK VITON COUPLER

801535, Rev.A

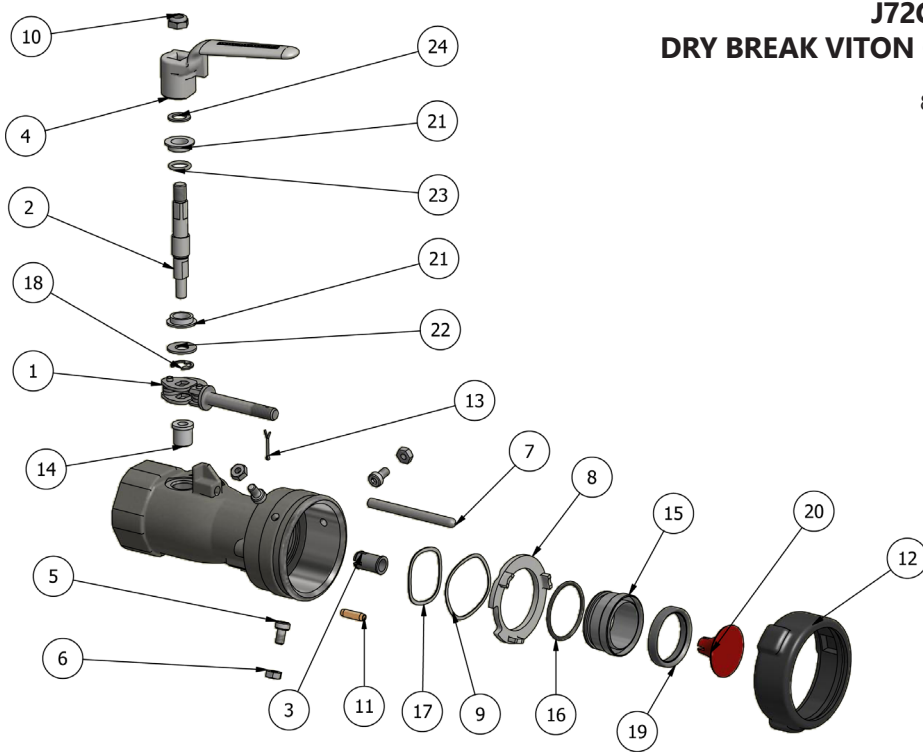

J72C-SVN0-C010 DRY BREAK VITON COUPLER KITS

ITEM	QTY	PART #	DESCRIPTION	NOSE SEAL KIT 800413	FRONT END KIT 800913	CROSS SHAFT SEAL KIT 800944	OVERHAUL KIT 801491
1	1	299988	LINK & STEM ASSY				
2	1	800860	SHAFT				
3	1	800250	BEARING				
4	1	401110	LEVER				
5	4	401104	BAYONET STUD		■		■
6	4	470040	HEX NUT		■		■
7	1	401087	INTERLOCK PIN				
8	1	401106	WAVE WASHER		■		■
9	1	470043	HEX NUT			■	■
10	1	470042	SPRING PIN		■		■
11	1	470045	COTTER PIN	■	■		■
12	1	299982	BEARING			■	■
13	1	299983	NOSE PIECE				
14	1	480017	O-RING	■	■		■
15	1	800172	WAVE SPRING		■		■
16	1	800861	E-CLIP			■	■
17	1	401096	NOSE SEAL	■	■		■
18	1	401117	POPPET				
19	2	299980	BEARING			■	■
20	1	299970	WASHER			■	■
21	1	407878	O-RING			■	■
22	1	401088	BUMPER RING		■		■
23	1	564059	INTERLOCK PLATE				
24	1	299981	WASHER			■	■

J72C-SVN0-C010
DRY BREAK VITON COUPLER

801536, Rev.A

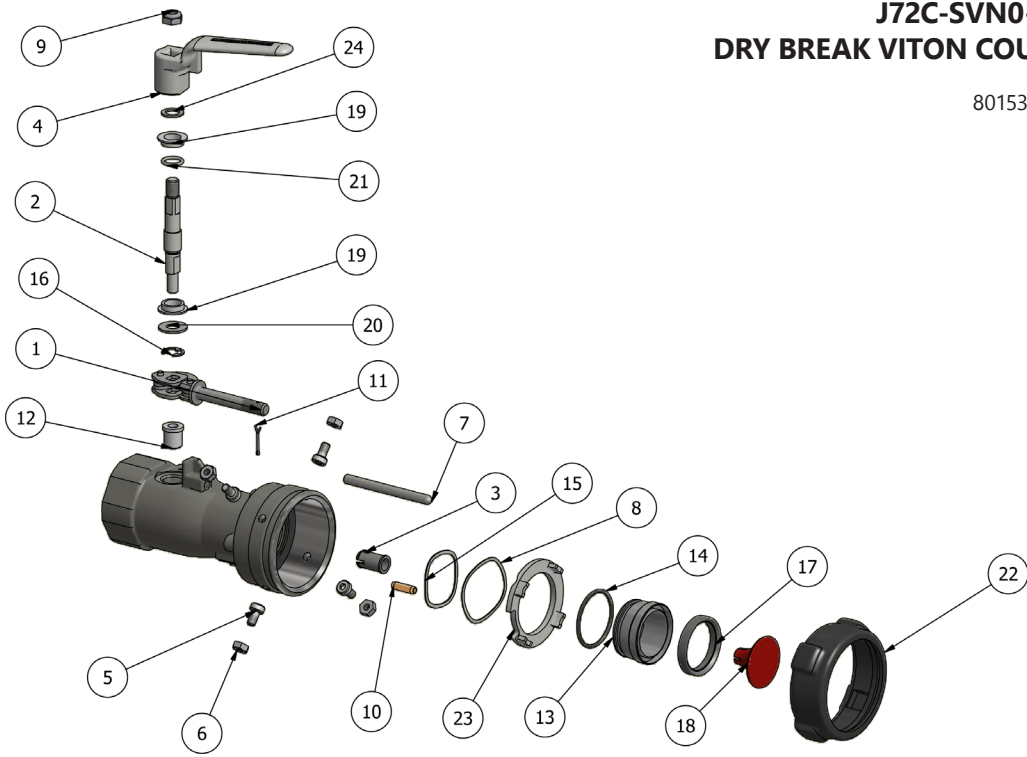

J72C-SVN1-C DRY BREAK VITON COUPLER KITS

ITEM	QTY	PART #	DESCRIPTION	NOSE SEAL KIT 800413	FRONT END KIT 800911	CROSS SHAFT SEAL KIT 800944	OVERHAUL KIT 801489
1	1	299988	LINK & STEM ASSY				
2	1	800860	SHAFT				
3	1	800250	BEARING				
4	1	401110	LEVER				
5	3	401104	BAYONET STUD		■		■
6	3	470040	HEX NUT		■		■
7	1	401087	PIN				
8	1	401089	INTERLOCK PLATE				
9	1	401106	WAVE WASHER		■		■
10	1	470043	HEX NUT			■	■
11	1	470042	SPRING PIN		■		■
12	1	563398	BUMPER RING		■		■
13	1	470045	COTTER PIN	■	■		■
14	1	299982	BEARING			■	■
15	1	299983	NOSE PIECE				
16	1	480017	O-RING	■	■		■
17	1	800172	WAVE SPRING		■		■
18	1	800861	E-CLIP			■	■
19	1	401096	NOSE SEAL	■	■		■
20	1	401117	POPPET				
21	2	299980	BEARING			■	■
22	1	299970	WASHER			■	■
23	1	407878	O-RING			■	■
24	1	299981	WASHER			■	■
25	32	801463	BALL BEARING				■*
26	1	801467	O-RING				■
27	1	801465	SET SCREW				■

* -QTY. 6 REPLACEMENT BALLS PROVIDED IN KIT

J72C-SVN1-C
DRY BREAK VITON COUPLER

801537, Rev.A

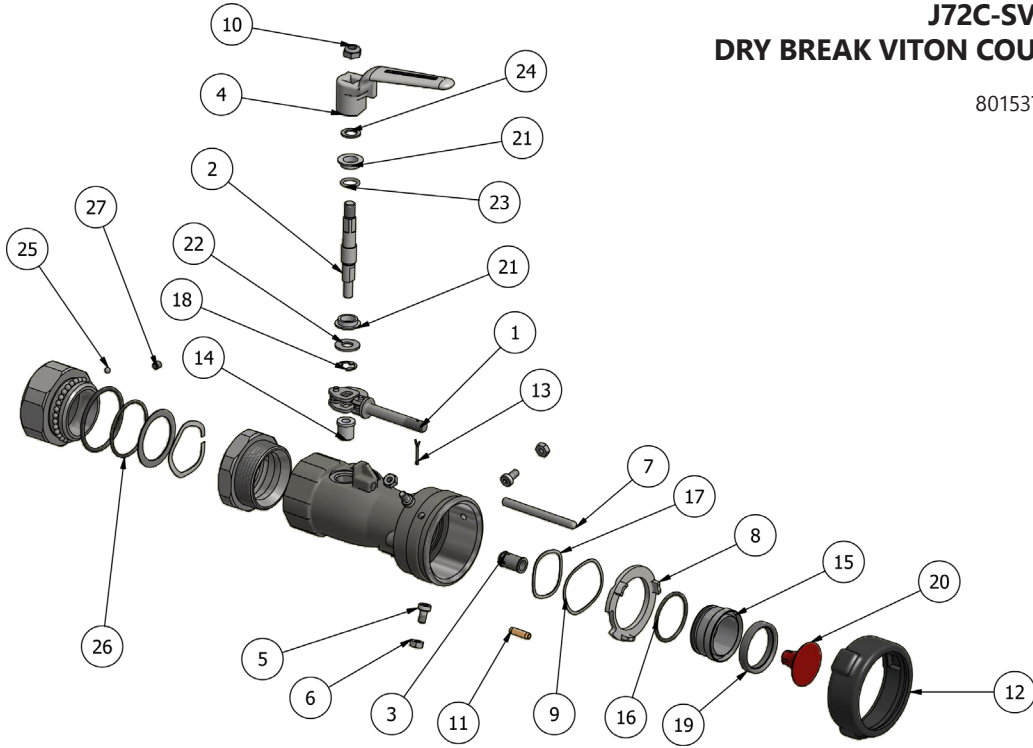

J72C-SVN1-C010 DRY BREAK VITON COUPLER KITS

ITEM	QTY	PART #	DESCRIPTION	NOSE SEAL KIT 800413	FRONT END KIT 800913	CROSS SHAFT SEAL KIT 800944	OVERHAUL KIT 801492
1	1	299988	LINK & STEM ASSY				
2	1	800860	SHAFT				
3	1	800250	BEARING				
4	1	401110	LEVER				
5	4	401104	BAYONET STUD		■		■
6	4	470040	HEX NUT		■		■
7	1	401087	PIN				
8	1	401106	WAVE WASHER		■		■
9	1	470043	HEX NUT			■	■
10	1	470042	SPRING PIN		■		■
11	1	470045	COTTER PIN	■	■		■
12	1	299982	BEARING			■	■
13	1	299983	NOSE PIECE				
14	1	480017	O-RING	■	■		■
15	1	800172	WAVE SPRING		■		■
16	1	800861	E-CLIP			■	■
17	1	401096	NOSE SEAL	■	■		■
18	1	401117	POPPET				
19	2	299980	BEARING			■	■
20	1	299970	WASHER			■	■
21	1	407878	O-RING			■	■
22	1	401088	BUMPER RING		■		■
23	1	564059	INTERLOCK PLATE				
24	1	299981	WASHER			■	■
25	32	801463	BALL BEARING				■*
26	1	801467	O-RING				■
27	1	801465	SET SCREW				■

* -QTY. 6 REPLACEMENT BALLS PROVIDED IN KIT

J72C-SVN1-C010
DRY BREAK VITON COUPLER

801538, Rev.A

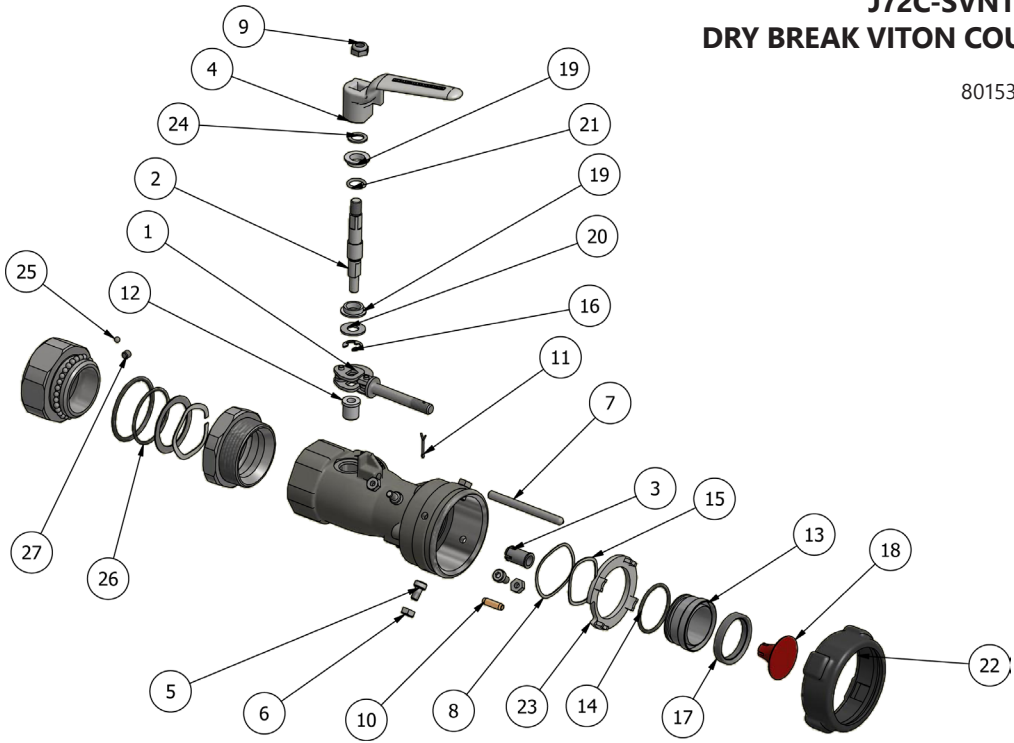

J72C-ABI0-D DRY BREAK BUNA COUPLER KITS

ITEM	QTY	PART #	DESCRIPTION	NOSE SEAL KIT 800412	FRONT END KIT 800174	CROSS SHAFT SEAL KIT 299786	OVERHAUL KIT 801476
1	1	800862	SHAFT				
2	1	490997	LINK & STEM ASSY				
3	1	577635	NOSE PIECE				
4	1	480012	O-RING	■	■		■
5	1	401082	POPPET				
6	1	401110	LEVER				
7	3	401104	BAYONET STUD		■		■
8	1	401087	INTERLOCK PIN				
9	1	563398	BUMPER RING		■		■
10	1	401089	INTERLOCK PLATE				
11	1	470042	SPRING PIN		■		■
12	3	470040	HEX NUT		■		■
13	1	401106	WAVE WASHER		■		■
14	1	800890	WAVE SPRING		■		■
15	1	470043	HEX NUT			■	■
16	1	470061	SPRING PIN			■	■
17	1	565629	GROOVED PIN			■	■
18	1	470045	COTTER PIN	■	■		■
19	1	401091	NOSE SEAL	■	■		■
20	1	577641	GASKET				■
21	1	407857	O-RING			■	■

J72C-ABI0-D
DRY BREAK BUNA COUPLER

801388, Rev.A

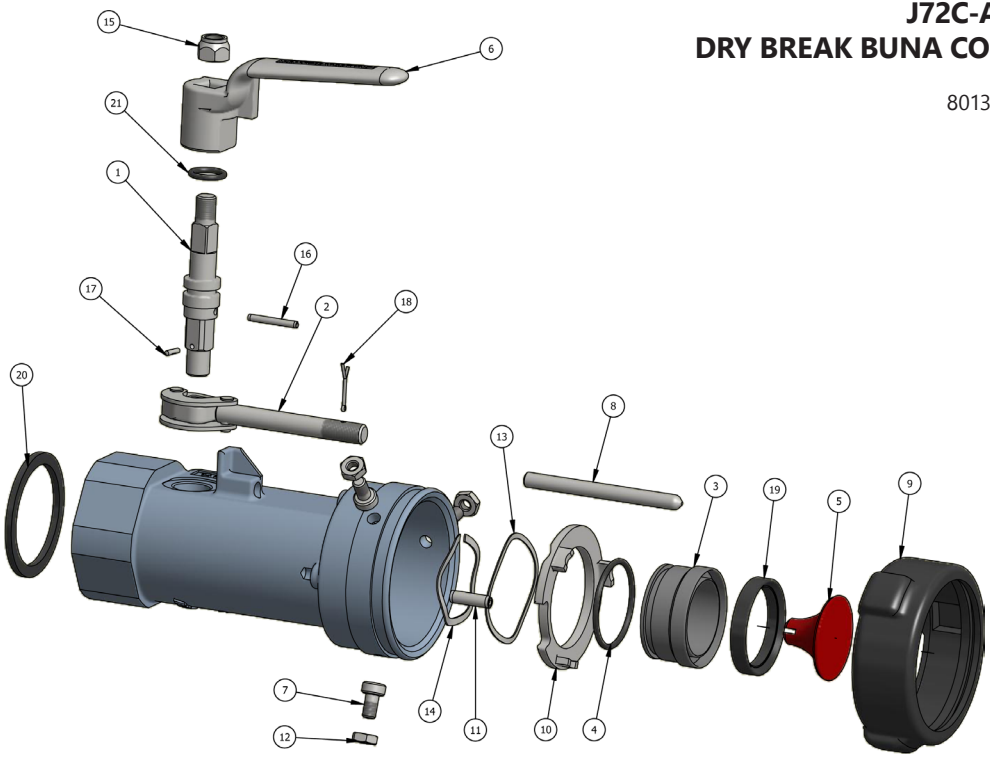

J72C-ABI1-D DRY BREAK BUNA COUPLER KITS

ITEM	QTY	PART #	DESCRIPTION	NOSE SEAL KIT 800412	FRONT END KIT 800174	CROSS SHAFT SEAL KIT 299786	SWIVEL SEAL KIT 800533	OVERHAUL KIT 801474
1	1	800862	SHAFT					
2	1	490997	LINK & STEM ASSY					
3	1	577635	NOSE PIECE					
4	1	401091	NOSE SEAL	■	■			■
5	1	407857	O-RING			■		■
6	1	480012	O-RING	■	■			■
7	1	401082	POPPET					
8	1	401110	LEVER					
9	3	401104	BAYONET STUD		■			■
10	1	401087	INTERLOCK PIN					
11	1	563398	BUMPER RING		■			■
12	1	401089	INTERLOCK PLATE					
13	1	470042	SPRING PIN		■			■
14	3	470040	HEX NUT		■			■
15	1	401106	WAVE WASHER		■			■
16	1	800890	WAVE SPRING		■			■
17	1	470043	HEX NUT			■		■
18	1	470061	SPRING PIN			■		■
19	1	565629	GROOVED PIN			■		■
20	1	470045	COTTER PIN	■	■			■
21	32	470036	BALL BEARING				■*	■*
22	1	401101	BEARING STRIP				■	■
23	1	405276	DUST O-RING				■	■
24	1	407855	PRODUCT O-RING				■	■
25	1	566191	BALL RETAINER				■	■
26	1	299761	SWIVEL BODY					
27	1	577641	GASKET				■	■
28	1	453807	LUBE FITTING N/S				■	■
29	1	299588	SET SCREW				■	■

* -QTY. 6 REPLACEMENT BALLS PROVIDED IN KIT
-LUBE FITTING PROVIDED IN SWIVEL SEAL KIT

J72C-ABI1-D
DRY BREAK BUNA COUPLER

801383, Rev.A

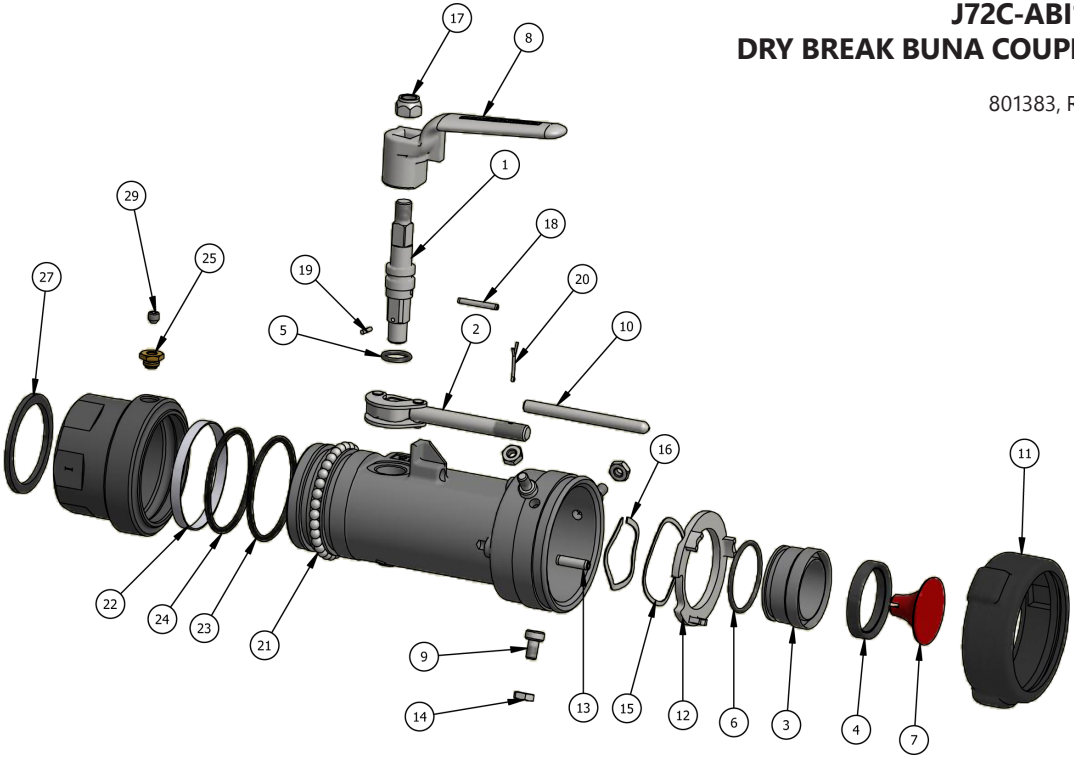

J72C-ABI1-D003 DRY BREAK BUNA COUPLER KITS

ITEM	QTY	PART #	DESCRIPTION	NOSE SEAL KIT 800412	FRONT END KIT 800174	CROSS SHAFT SEAL KIT 299786	SWIVEL SEAL KIT 800532	OVERHAUL KIT 801474
1	1	490997	LINK AND STEM					
2	1	577635	NOSE PIECE					
3	1	401091	NOSE SEAL	■	■			■
4	1	407857	O-RING			■		■
5	1	480012	O-RING	■	■			■
6	1	401082	POPPET					
7	1	401110	LEVER					
8	3	401104	BAYONET STUD		■			■
9	1	401087	INTERLOCK PIN					
10	1	563398	BUMPER RING		■			■
11	1	401089	INTERLOCK PLATE					
12	1	470042	SPRING PIN		■			■
13	3	470040	HEX NUT		■			■
14	1	401106	WAVE WASHER		■			■
15	1	800890	WAVE SPRING		■			■
16	1	470043	HEX NUT			■		■
17	1	470061	SPRING PIN			■		■
18	1	565629	GROOVED PIN			■		■
19	1	470045	COTTER PIN	■	■			■
20	1	299761	SWIVEL BODY					
21	32	470036	BALL BEARING				■*	■*
22	1	401101	BEARING STRIP				■	■
23	1	405276	DUST O-RING				■	■
24	1	407855	PRODUCT O-RING				■	■
25	1	566191	BALL RETAINER				■	■
26	1	577641	GASKET				■	■
27	3	578010	SCREW					
28	1	800862	SHAFT					
29	1	299558	SET SCREW				■	■
30	1	453807	LUBE FITTING N/S				■	■

* -QTY. 6 REPLACEMENT BALLS PROVIDED IN KIT
-LUBE FITTING PROVIDED IN SWIVEL SEAL KIT

J72C-ABI1-D003
DRY BREAK BUNA COUPLER

801415, Rev.A

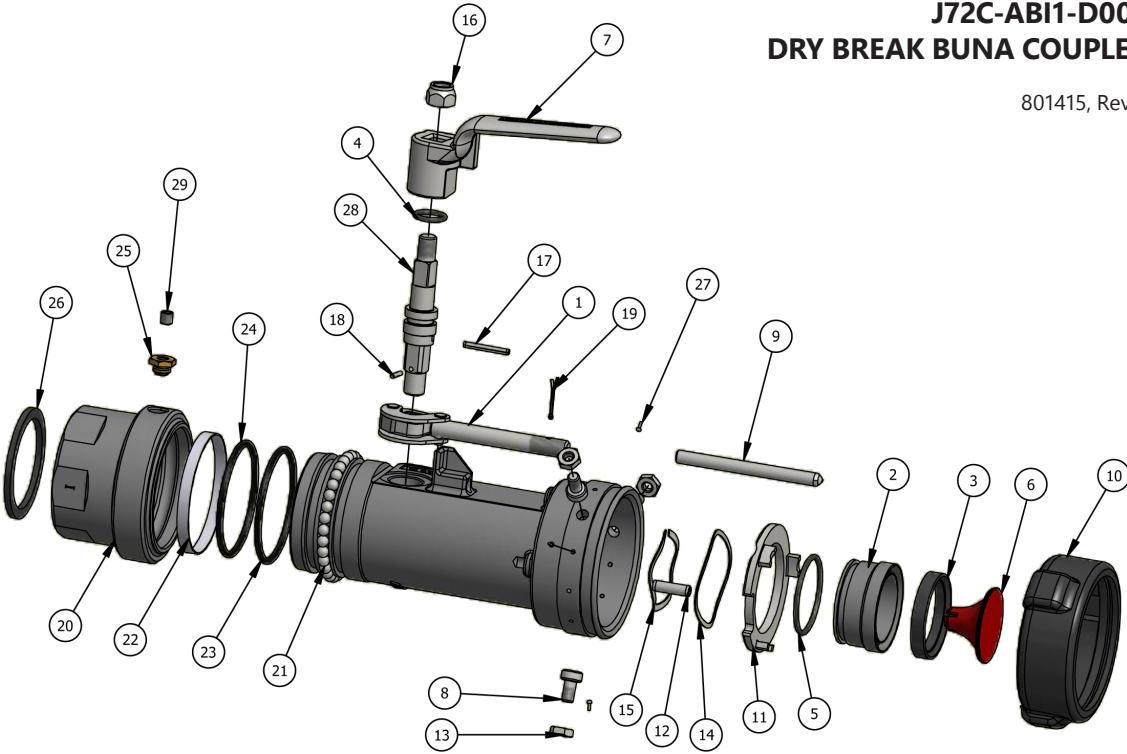

J72C-ABI2-D DRY BREAK BUNA COUPLER KITS

ITEM	QTY	PART #	DESCRIPTION	NOSE SEAL KIT 800412	FRONT END KIT 800174	CROSS SHAFT SEAL KIT 299786	SWIVEL SEAL KIT 800533	OVERHAUL KIT 801474
1	1	800862	SHAFT					
2	1	490997	LINK & STEM ASSY					
3	1	577635	NOSE PIECE					
4	1	407857	O-RING			■		■
5	1	480012	O-RING	■	■			■
6	1	401082	POPPET					
7	1	401110	LEVER					
8	3	401104	BAYONET STUD		■			■
9	1	401087	INTERLOCK PIN					
10	1	563398	BUMPER RING		■			■
11	1	401089	INTERLOCK PLATE					
12	1	470042	SPRING PIN		■			■
13	3	470040	HEX NUT		■			■
14	1	401106	WAVE WASHER		■			■
15	1	800890	WAVE SPRING		■			■
16	1	470043	HEX NUT			■		■
17	1	470061	SPRING PIN			■		■
18	1	565629	GROOVED PIN			■		■
19	1	470045	COTTER PIN	■	■			■
20	32	470036	BALL BEARING				■*	■*
21	1	401101	BEARING STRIP				■	■
22	1	405276	DUST O-RING				■	■
23	1	407855	PRODUCT O-RING				■	■
24	1	566191	BALL RETAINER				■	■
25	1	577641	GASKET				■	■
26	1	800141	SWIVEL BODY					
27	1	453807	LUBE FITTING				■	■
28	1	401091	NOSE SEAL	■	■			■

* -QTY. 6 REPLACEMENT BALLS PROVIDED IN KIT

J72C-ABI2-D
DRY BREAK BUNA COUPLER

801456, Rev.A

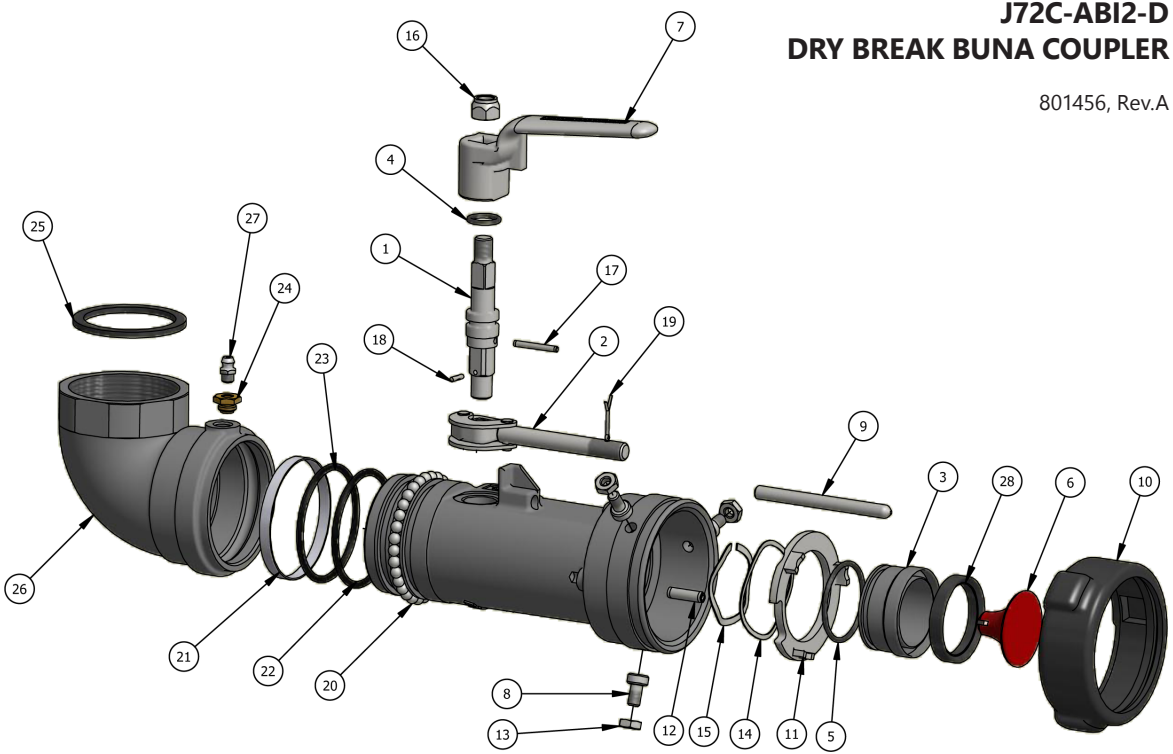

J72C-ABI2-D003 DRY BREAK BUNA COUPLER KITS

ITEM	QTY	PART #	DESCRIPTION	NOSE SEAL KIT 800412	FRONT END KIT 800174	CROSS SHAFT SEAL KIT 299786	SWIVEL SEAL KIT 800533	OVERHAUL KIT 801474
1	1	800862	SHAFT					
2	1	490997	LINK AND STEM					
3	1	577635	NOSE PIECE					
4	1	401091	NOSE SEAL	■	■			■
5	1	407857	O-RING			■		■
6	1	480012	O-RING	■	■			■
7	1	401082	POPPET					
8	1	401110	LEVER					
9	3	401104	BAYONET STUD		■			■
10	1	401087	INTERLOCK PIN					
11	1	563398	BUMPER RING		■			■
12	1	401089	INTERLOCK PLATE					
13	1	470042	SPRING PIN		■			■
14	3	470040	HEX NUT		■			■
15	1	401106	WAVE WASHER		■			■
16	1	800890	WAVE SPRING		■			■
17	1	470043	HEX NUT			■		■
18	1	470061	SPRING PIN			■		■
19	1	565629	GROOVED PIN			■		■
20	1	470045	COTTER PIN	■	■			■
21	32	470036	BALL BEARING				■*	■*
22	1	401101	BEARING STRIP				■	■
23	1	405276	DUST O-RING				■	■
24	1	407855	PRODUCT O-RING				■	■
25	1	566191	BALL RETAINER				■	■
26	3	578010	SCREW					
27	1	800141	SWIVEL BODY					
28	1	577641	GASKET				■	■
29	1	453807	LUBE FITTING				■	■

* -QTY. 6 REPLACEMENT BALLS PROVIDED IN KIT

J72C-ABI2-D003
DRY BREAK BUNA COUPLER

801437, Rev.A

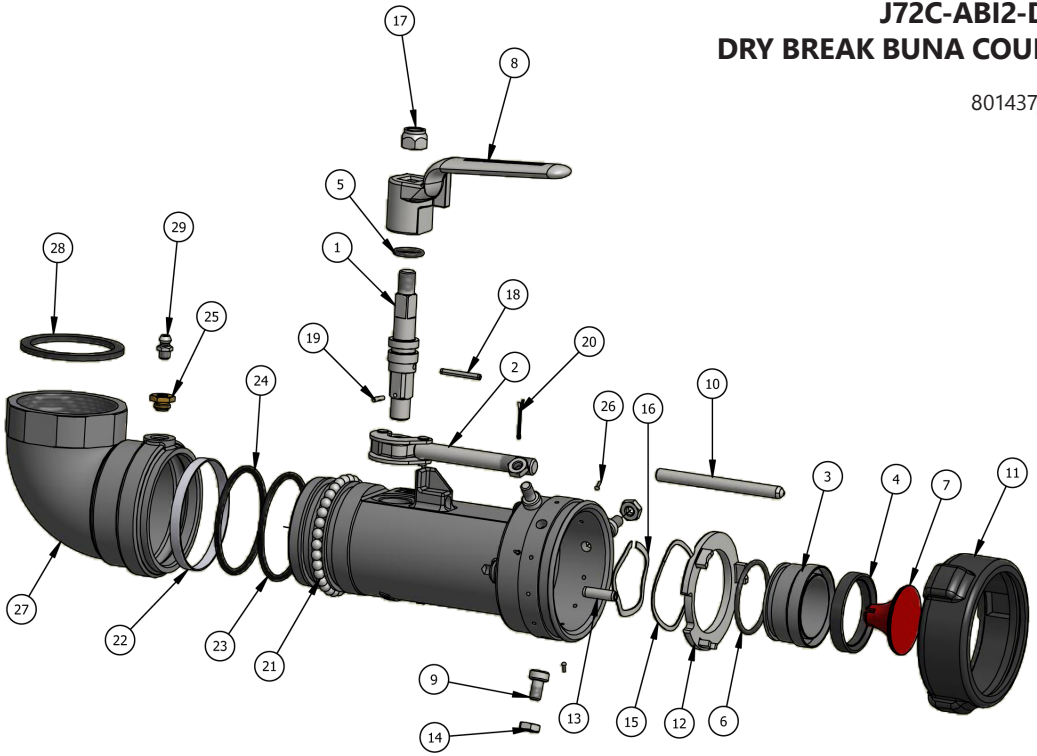

J72C-ABN0-D DRY BREAK BUNA COUPLER KITS

ITEM	QTY	PART #	DESCRIPTION	NOSE SEAL KIT 800412	FRONT END KIT 800174	CROSS SHAFT SEAL KIT 299786	OVERHAUL KIT 801464
1	1	800862	SHAFT				
2	1	490997	LINK & STEM ASSY				
3	1	577635	NOSE PIECE				
4	1	480012	O-RING	■	■		■
5	1	401082	POPPET				
6	1	401110	LEVER				
7	3	401104	BAYONET STUD		■		■
8	1	401087	INTERLOCK PIN				
9	1	563398	BUMPER RING		■		■
10	1	401089	INTERLOCK PLATE				
11	1	470042	SPRING PIN		■		■
12	3	470040	HEX NUT		■		■
13	1	401106	WAVE WASHER		■		■
14	1	800890	WAVE SPRING		■		■
15	1	470043	HEX NUT			■	■
16	1	470061	SPRING PIN			■	■
17	1	565629	GROOVED PIN			■	■
18	1	470045	COTTER PIN	■	■		■
19	1	401091	NOSE SEAL	■	■		■
20	1	407857	O-RING			■	■

J72C-ABN0-D
DRY BREAK BUNA COUPLER

801387, Rev.A

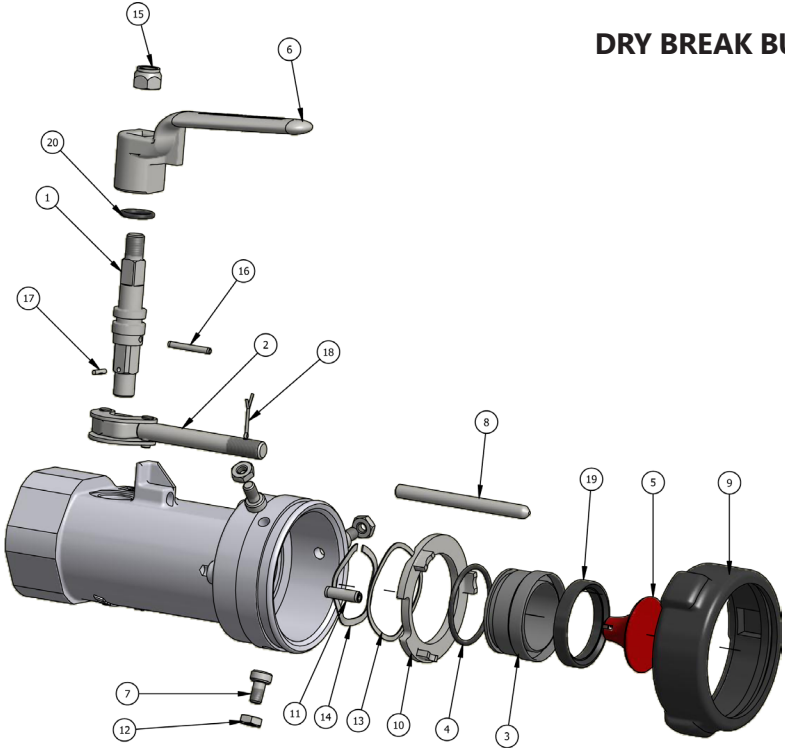

J72C-ABN0-D001 DRY BREAK BUNA COUPLER KITS

ITEM	QTY	PART #	DESCRIPTION	NOSE SEAL KIT 800412	FRONT END KIT 800174	CROSS SHAFT SEAL KIT 299786	OVERHAUL KIT 801464
1	1	800862	SHAFT				
2	1	490997	LINK & STEM ASSY				
3	1	577635	NOSE PIECE				
4	1	480012	O-RING	■	■		■
5	1	401082	POPPET				
6	1	405874	LEVER				
7	3	401104	BAYONET STUD		■		■
8	1	401087	INTERLOCK PIN				
9	1	563398	BUMPER RING		■		■
10	1	401089	INTERLOCK PLATE				
11	1	470042	SPRING PIN		■		■
12	3	470040	HEX NUT		■		■
13	1	401106	WAVE WASHER		■		■
14	1	800890	WAVE SPRING		■		■
15	1	470043	HEX NUT			■	■
16	1	470061	SPRING PIN			■	■
17	1	565629	GROOVED PIN			■	■
18	1	470045	COTTER PIN	■	■		■
19	1	401091	NOSE SEAL	■	■		■
20	1	407857	O-RING			■	■

J72C-ABN0-D001
DRY BREAK BUNA COUPLER

801448, Rev.A

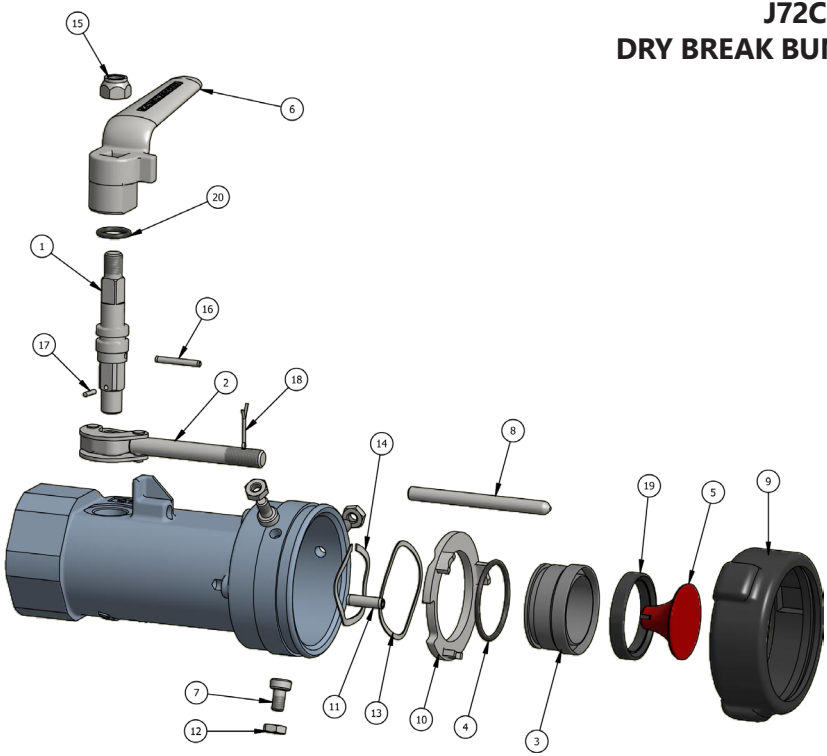

J72C-ABN0-D002 DRY BREAK BUNA COUPLER KITS

ITEM	QTY	PART #	DESCRIPTION	NOSE SEAL KIT 800412	FRONT END KIT 800174	CROSS SHAFT SEAL KIT 299786	OVERHAUL KIT 801464
1	1	800862	SHAFT				
2	1	490997	LINK & STEM ASSY				
3	1	401105	NOSE PIECE				
4	1	480012	O-RING	■	■		■
5	1	401117	POPPET				
6	1	401110	LEVER				
7	3	401104	BAYONET STUD		■		■
8	1	401087	INTERLOCK PIN				
9	1	563398	BUMPER RING		■		■
10	1	401089	INTERLOCK PLATE				
11	1	470042	SPRING PIN		■		■
12	3	470040	HEX NUT		■		■
13	1	401106	WAVE WASHER		■		■
14	1	800890	WAVE SPRING		■		■
15	1	470043	HEX NUT			■	■
16	1	470061	SPRING PIN			■	■
17	1	565629	GROOVED PIN			■	■
18	1	470045	COTTER PIN	■	■		■
19	1	401091	NOSE SEAL	■	■		■
20	1	407857	O-RING			■	■

J72C-ABN0-D002
DRY BREAK BUNA COUPLER

801444, Rev.A

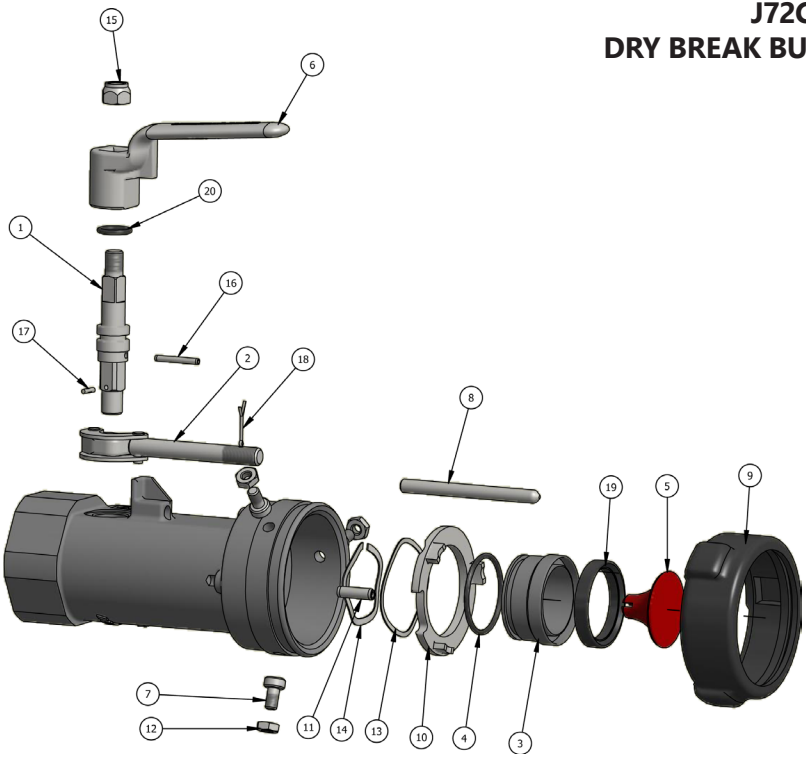

J72C-ABN0-D003 DRY BREAK BUNA COUPLER KITS

ITEM	QTY	PART #	DESCRIPTION	NOSE SEAL KIT 800412	FRONT END KIT 800174	CROSS SHAFT SEAL KIT 299786	OVERHAUL KIT 801464
1	1	800862	SHAFT				
2	1	490997	LINK & STEM ASSY				
3	1	577635	NOSE PIECE				
4	1	480012	O-RING	■	■		■
5	1	401082	POPPET				
6	1	401110	LEVER				
7	3	401104	BAYONET STUD		■		■
8	1	401087	INTERLOCK PIN				
9	1	563398	BUMPER RING		■		■
10	1	401089	INTERLOCK PLATE				
11	1	470042	SPRING PIN		■		■
12	3	470040	HEX NUT		■		■
13	1	401106	WAVE WASHER		■		■
14	1	800890	WAVE SPRING		■		■
15	1	470043	HEX NUT			■	■
16	1	470061	SPRING PIN			■	■
17	1	565629	GROOVED PIN			■	■
18	1	470045	COTTER PIN	■	■		■
19	1	401091	NOSE SEAL	■	■		■
20	1	578010	SCREW				
21	1	407857	O-RING			■	■

J72C-ABN0-D003
DRY BREAK BUNA COUPLER

801438, Rev.A

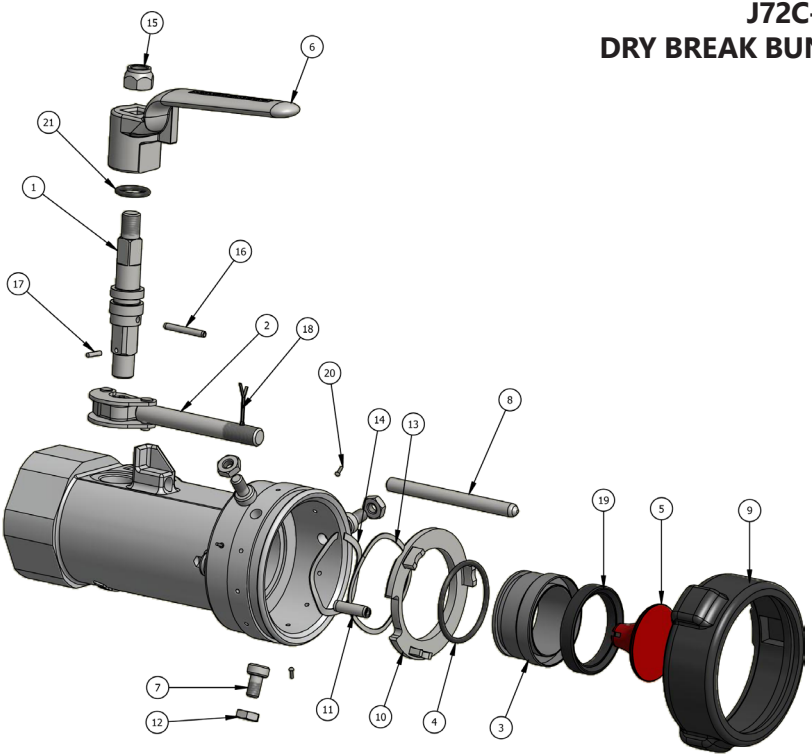

J72C-ABN1-D DRY BREAK BUNA COUPLER KITS

ITEM	QTY	PART #	DESCRIPTION	NOSE SEAL KIT 800412	FRONT END KIT 800174	CROSS SHAFT SEAL KIT 299786	SWIVEL SEAL KIT 299801	OVERHAUL KIT 801457
1	1	470043	HEX NUT			■		■
2	1	401110	LEVER					
3	1	407857	O-RING			■		■
4	1	800862	SHAFT					
5	1	565629	GROOVED PIN			■		■
6	1	566191	BALL RETAINER				■	■
7	1	299745	SWIVEL BODY					
8	1	401101	BEARING STRIP				■	■
9	1	407855	PRODUCT O-RING				■	■
10	1	405276	DUST O-RING				■	■
11	32	470036	BALL BEARING				■*	■*
12	3	401104	BAYONET STUD		■			■
13	3	470040	HEX NUT		■			■
14	1	800890	WAVE SPRING		■			■
15	1	470042	SPRING PIN		■			■
16	1	480012	O-RING	■	■			■
17	1	401106	WAVE WASHER		■			■
18	1	401089	INTERLOCK PLATE					
19	1	401082	POPPET					
20	1	563398	BUMPER RING		■			■
21	1	401091	NOSE SEAL	■	■			■
22	1	577635	NOSE PIECE					
23	1	401087	INTERLOCK PIN					
24	1	490997	LINK & STEM ASSY					
25	1	470045	COTTER PIN	■	■			■
26	1	470061	SPRING PIN			■		■
27	1	299558	SET SCREW				■	■
28	1	453807	LUBE FITTING N/S				■	■

* -QTY. 6 REPLACEMENT BALLS PROVIDED IN KIT
-LUBE FITTING PROVIDED IN SWIVEL SEAL KIT

J72C-ABN1-D
DRY BREAK BUNA COUPLER

801376, Rev.A

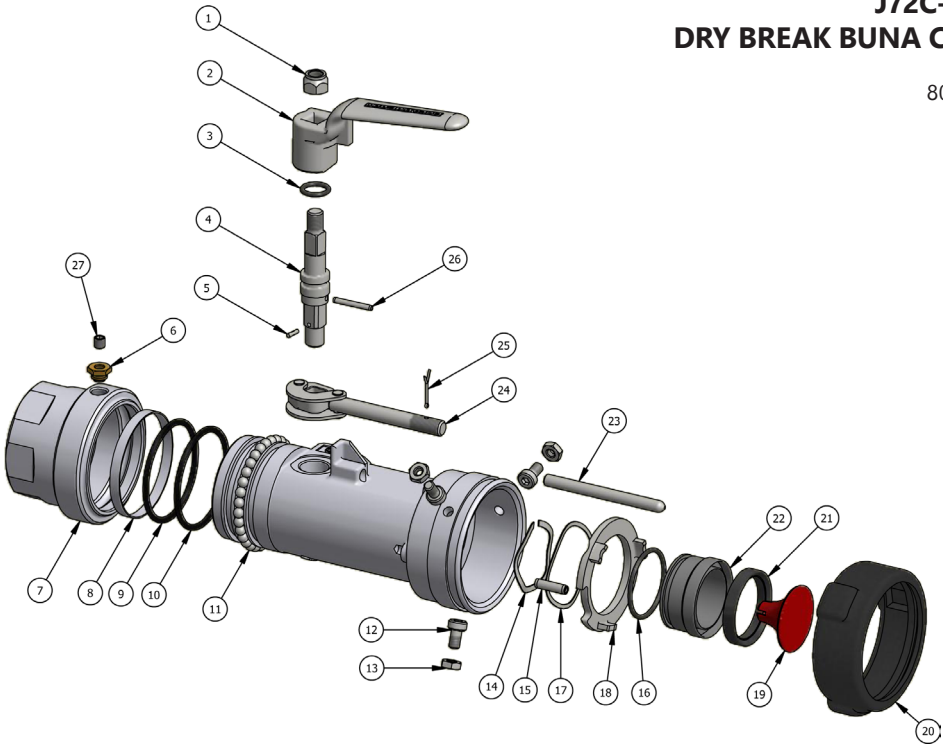

J72C-ABN1-D002 DRY BREAK BUNA COUPLER KITS

ITEM	QTY	PART #	DESCRIPTION	NOSE SEAL KIT 800412	FRONT END SEAL KIT 800174	CROSS SHAFT SEAL KIT 299786	SWIVEL SEAL KIT 299801	OVERHAUL KIT 801457
1	1	800862	SHAFT					
2	1	490997	LINK & STEM					
3	1	401105	NOSE PIECE					
4	1	401091	NOSE SEAL	■	■			■
5	1	407857	O-RING			■		■
6	1	480012	O-RING	■	■			■
7	1	401117	POPPET					
8	1	401110	LEVER					
9	3	401104	BAYONET STUD		■			■
10	1	401087	INTERLOCK PIN					
11	1	563398	BUMPER RING		■			■
12	1	401089	INTERLOCK PLATE					
13	1	470042	SPRING PIN		■			■
14	3	470040	HEX NUT		■			■
15	1	401106	WAVE WASHER		■			■
16	1	800890	WAVE SPRING		■			■
17	1	470043	HEX NUT			■		■
18	1	470061	SPRING PIN			■		■
19	1	565629	GROOVED PIN			■		■
20	1	470045	COTTER PIN	■	■			■
21	1	299745	SWIVEL BODY					
22	32	470036	BALL BEARING				■*	■*
23	1	401101	BEARING STRIP				■	■
24	1	405276	DUST O-RING				■	■
25	1	407855	PRODUCT O-RING				■	■
26	1	566191	BALL RETAINER				■	■
27	1	299558	SET SCREW				■	■
28	1	453807	LUBE FITTING N/S				■	■

* -QTY. 6 REPLACEMENT BALLS PROVIDED IN KIT
-LUBE FITTING PROVIDED IN SWIVEL SEAL KIT

J72C-ABN1-D002
DRY BREAK BUNA COUPLER

801443, Rev.A

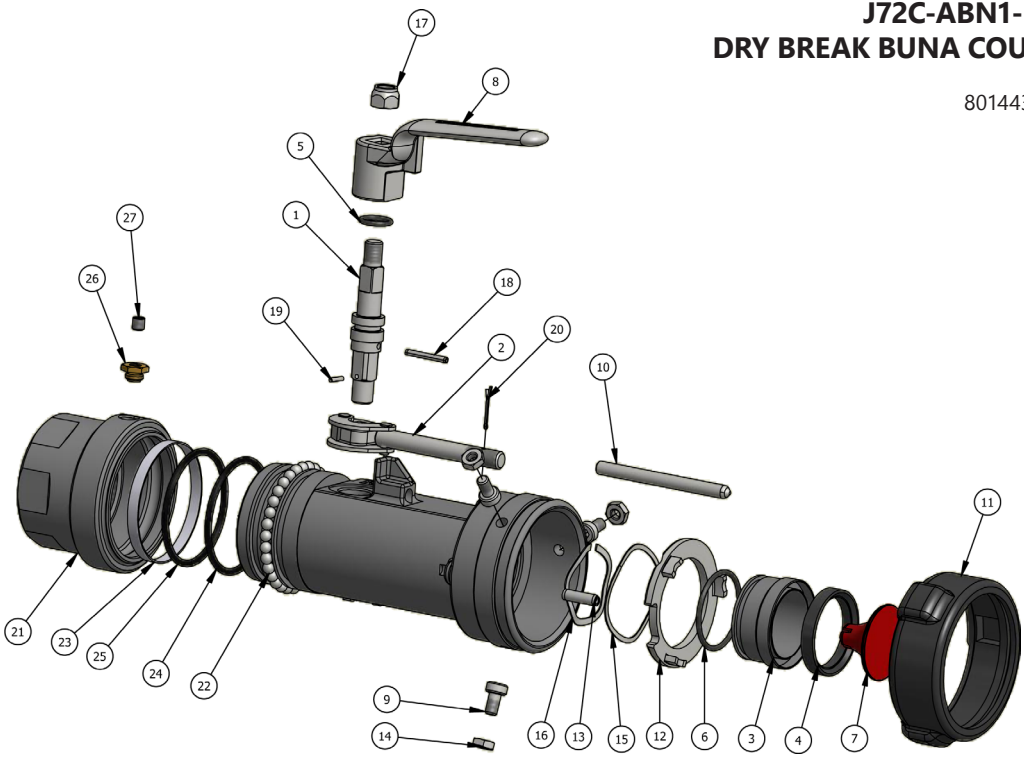

J72C-ABN1-D003 DRY BREAK BUNA COUPLER KITS

ITEM	QTY	PART #	DESCRIPTION	NOSE SEAL KIT 800412	FRONT END KIT 800174	CROSS SHAFT SEAL KIT 299786	SWIVEL SEAL KIT 299801	OVERHAUL KIT 801457
1	1	800862	SHAFT					
2	1	490997	LINK AND STEM					
3	1	577635	NOSE PIECE					
4	1	401091	NOSE SEAL	■	■			■
5	1	407857	O-RING			■		■
6	1	480012	O-RING	■	■			■
7	1	401082	POPPET					
8	1	401110	LEVER					
9	3	401104	BAYONET STUD		■			■
10	1	401087	INTERLOCK PIN					
11	1	563398	BUMPER RING		■			■
12	1	401089	INTERLOCK PLATE					
13	1	470042	SPRING PIN		■			■
14	3	470040	HEX NUT		■			■
15	1	401106	WAVE WASHER		■			■
16	1	800890	WAVE SPRING		■			■
17	1	470043	HEX NUT			■		■
18	1	470061	SPRING PIN			■		■
19	1	565629	GROOVED PIN			■		■
20	1	470045	COTTER PIN	■	■			■
21	1	299745	SWIVEL BODY					
22	32	470036	BALL BEARING				■*	■*
23	1	401101	BEARING STRIP				■	■
24	1	405276	DUST O-RING				■	■
25	1	407855	PRODUCT O-RING				■	■
26	1	566191	BALL RETAINER				■	■
27	3	578010	SCREW					
28	1	299558	SET SCREW				■	■
29	1	453807	LUBE FITTING N/S				■	■

* -QTY. 6 REPLACEMENT BALLS PROVIDED IN KIT
-LUBE FITTING PROVIDED IN SWIVEL SEAL KIT

J72C-ABN1-D003
DRY BREAK BUNA COUPLER

801433, Rev.A

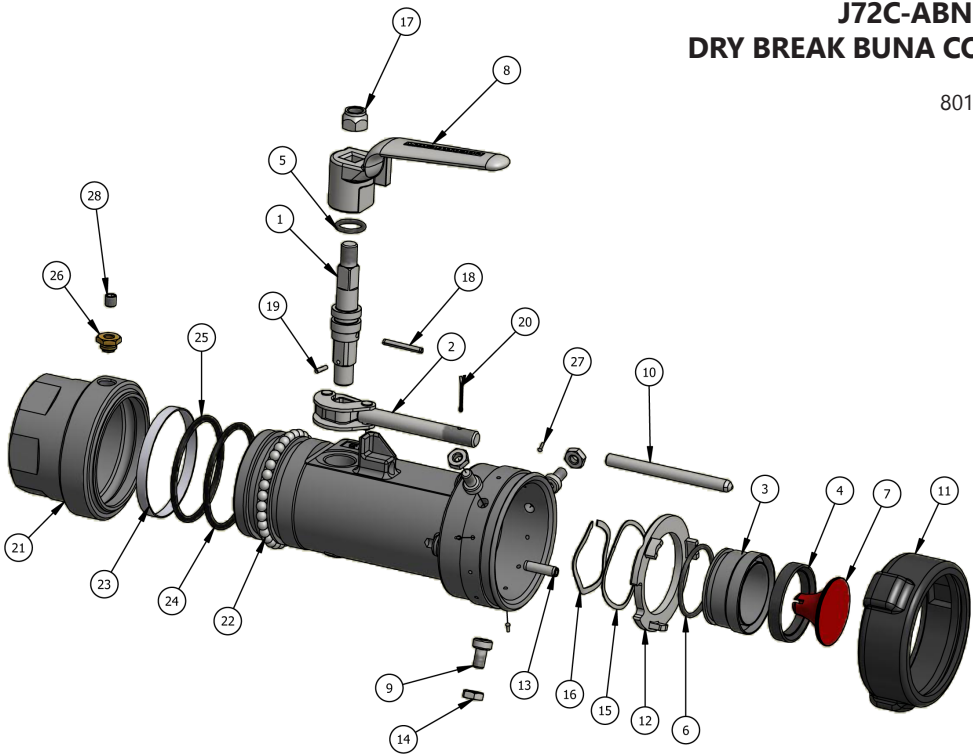

J72C-ABN2-D DRY BREAK BUNA COUPLER KITS

ITEM	QTY	PART #	DESCRIPTION	NOSE SEAL KIT 800412	FRONT END KIT 800174	CROSS SHAFT SEAL KIT 299786	SWIVEL SEAL KIT 299801	OVERHAUL KIT 801457
1	1	800862	SHAFT					
2	1	490997	LINK & STEM ASSY					
3	1	577635	NOSE PIECE					
4	1	401091	NOSE SEAL	■	■			■
5	1	407857	O-RING			■		■
6	1	480012	O-RING	■	■			■
7	1	401082	POPPET					
8	1	401110	LEVER					
9	3	401104	BAYONET STUD		■			■
10	1	401087	INTERLOCK PIN					
11	1	563398	BUMPER RING		■			■
12	1	401089	INTERLOCK PLATE					
13	1	470042	SPRING PIN		■			■
14	3	470040	HEX NUT		■			■
15	1	401106	WAVE WASHER		■			■
16	1	800890	WAVE SPRING		■			■
17	1	470043	HEX NUT			■		■
18	1	470061	SPRING PIN			■		■
19	1	565629	GROOVED PIN			■		■
20	1	470045	COTTER PIN	■	■			■
21	32	470036	BALL BEARING				■*	■*
22	1	401101	BEARING STRIP				■	■
23	1	405276	DUST O-RING				■	■
24	1	407855	PRODUCT O-RING				■	■
25	1	566191	BALL RETAINER				■	■
26	1	401102	SWIVEL BODY					
27	1	453807	LUBE FITTING				■	■

* -QTY. 6 REPLACEMENT BALLS PROVIDED IN KIT

J72C-ABN2-D
DRY BREAK BUNA COUPLER

801408, Rev.A

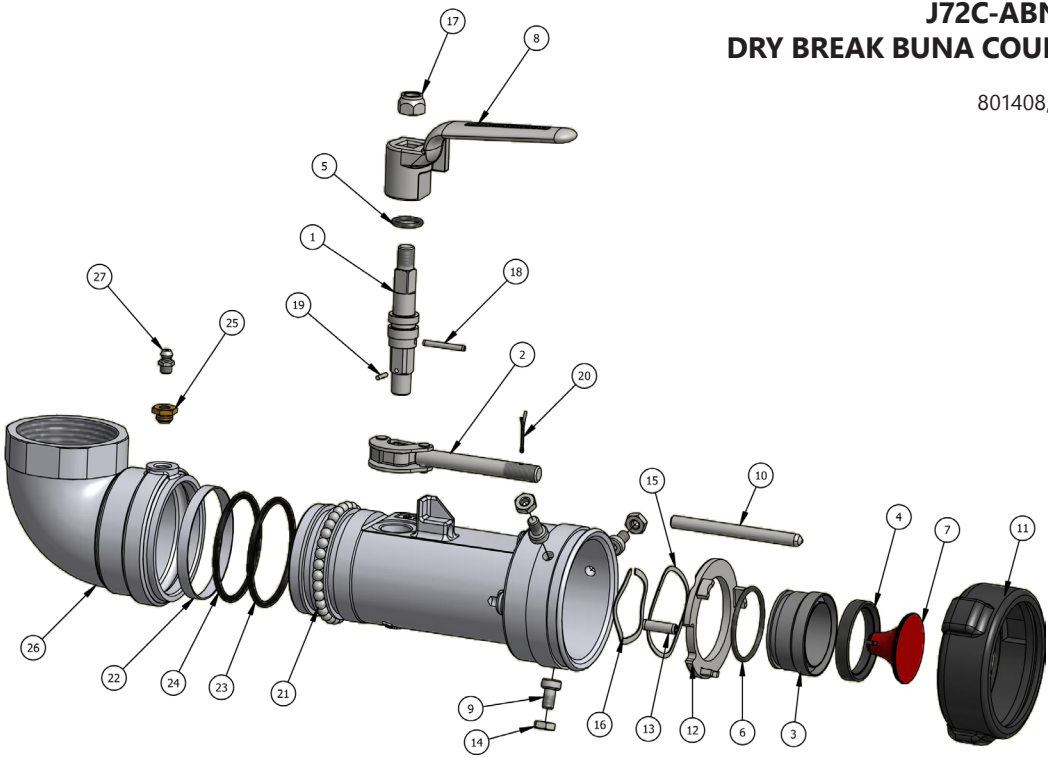

J72C-ABN2-D001 DRY BREAK BUNA COUPLER KITS

ITEM	QTY	PART #	DESCRIPTION	NOSE SEAL KIT 800412	FRONT END SEAL KIT 800174	CROSS SHAFT SEAL KIT 299786	SWIVEL SEAL KIT 299803	OVERHAUL KIT 801457
1	1	800862	SHAFT					
2	1	490997	LINK & STEM ASSY					
3	1	577635	NOSE PIECE					
4	1	401091	NOSE SEAL	■	■			■
5	1	407857	O-RING			■		■
6	1	480012	O-RING	■	■			■
7	1	401082	POPPET					
8	1	405874	LEVER					
9	3	401104	BAYONET STUD		■			■
10	1	401087	INTERLOCK PIN					
11	1	563398	BUMPER RING		■			■
12	1	401089	INTERLOCK PLATE					
13	1	470042	SPRING PIN		■			■
14	3	470040	HEX NUT		■			■
15	1	401106	WAVE WASHER		■			■
16	1	800890	WAVE SPRING		■			■
17	1	470043	HEX NUT			■		■
18	1	470061	SPRING PIN			■		■
19	1	565629	GROOVED PIN			■		■
20	1	470045	COTTER PIN	■	■			■
21	32	470036	BALL BEARING				■*	■*
22	1	401101	BEARING STRIP				■	■
23	1	405276	DUST O-RING				■	■
24	1	407855	PRODUCT O-RING				■	■
25	1	566191	BALL RETAINER				■	■
26	1	401102	SWIVEL BODY					
27	1	453807	LUBE FITTING				■	■

* -QTY. 6 REPLACEMENT BALLS PROVIDED IN KIT

J72C-ABN2-D001
DRY BREAK BUNA COUPLER

801447, Rev.A

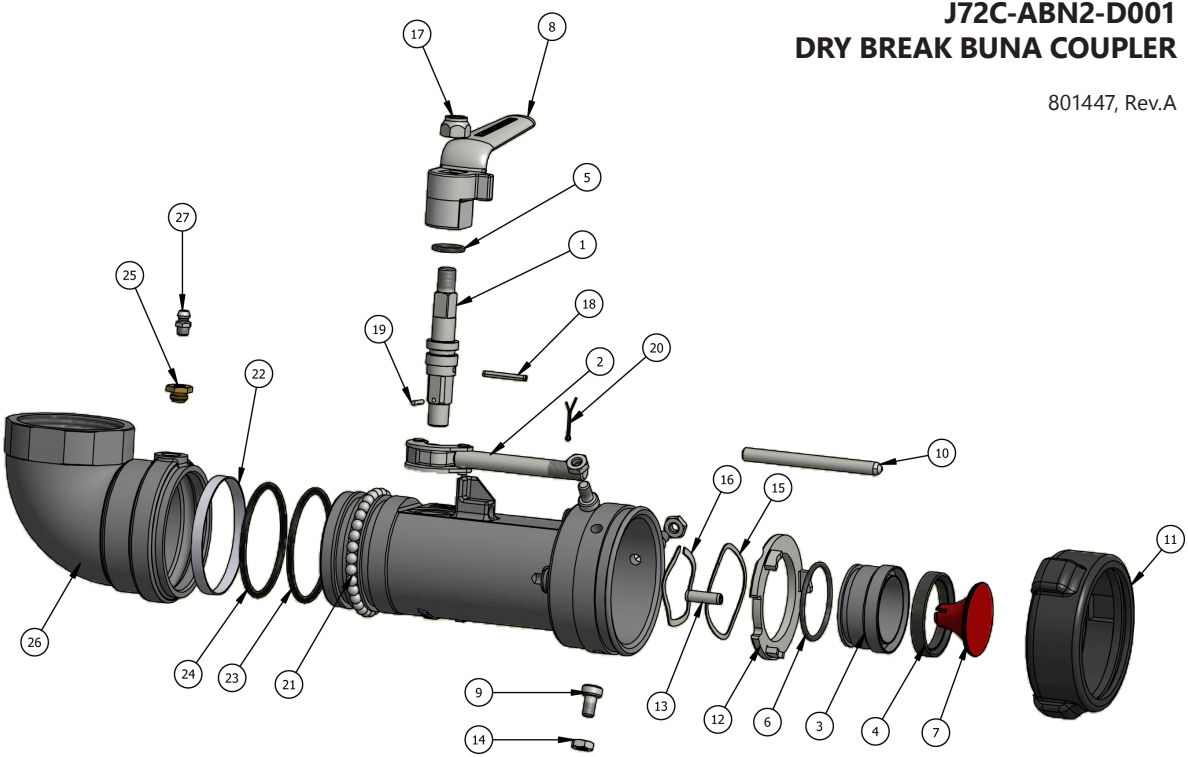

J72C-ABN2-D002 DRY BREAK BUNA COUPLER KITS

ITEM	QTY	PART #	DESCRIPTION	NOSE SEAL KIT 800412	FRONT END SEAL KIT 800174	CROSS SHAFT SEAL KIT 299786	SWIVEL SEAL KIT 299803	OVERHAUL KIT 801457
1	1	800862	SHAFT					
2	1	490997	LINK & STEM ASSY					
3	1	401105	NOSE PIECE					
4	1	401091	NOSE SEAL	■	■			■
5	1	407857	O-RING			■		■
6	1	480012	O-RING	■	■			■
7	1	401117	POPPET					
8	1	401110	LEVER					
9	3	401104	BAYONET STUD		■			■
10	1	401087	INTERLOCK PIN					
11	1	563398	BUMPER RING		■			■
12	1	401089	INTERLOCK PLATE					
13	1	470042	SPRING PIN		■			■
14	3	470040	HEX NUT		■			■
15	1	401106	WAVE WASHER		■			■
16	1	800890	WAVE SPRING		■			■
17	1	470043	HEX NUT			■		■
18	1	470061	SPRING PIN			■		■
19	1	565629	GROOVED PIN			■		■
20	1	470045	COTTER PIN	■	■			■
21	32	470036	BALL BEARING				■*	■*
22	1	401101	BEARING STRIP				■	■
23	1	405276	DUST O-RING				■	■
24	1	407855	PRODUCT O-RING				■	■
25	1	566191	BALL RETAINER				■	■
26	1	453807	LUBE FITTING				■	■
27	1	401102	SWIVEL BODY					

* -QTY. 6 REPLACEMENT BALLS PROVIDED IN KIT

J72C-ABN2-D002
DRY BREAK BUNA COUPLER

801440, Rev.A

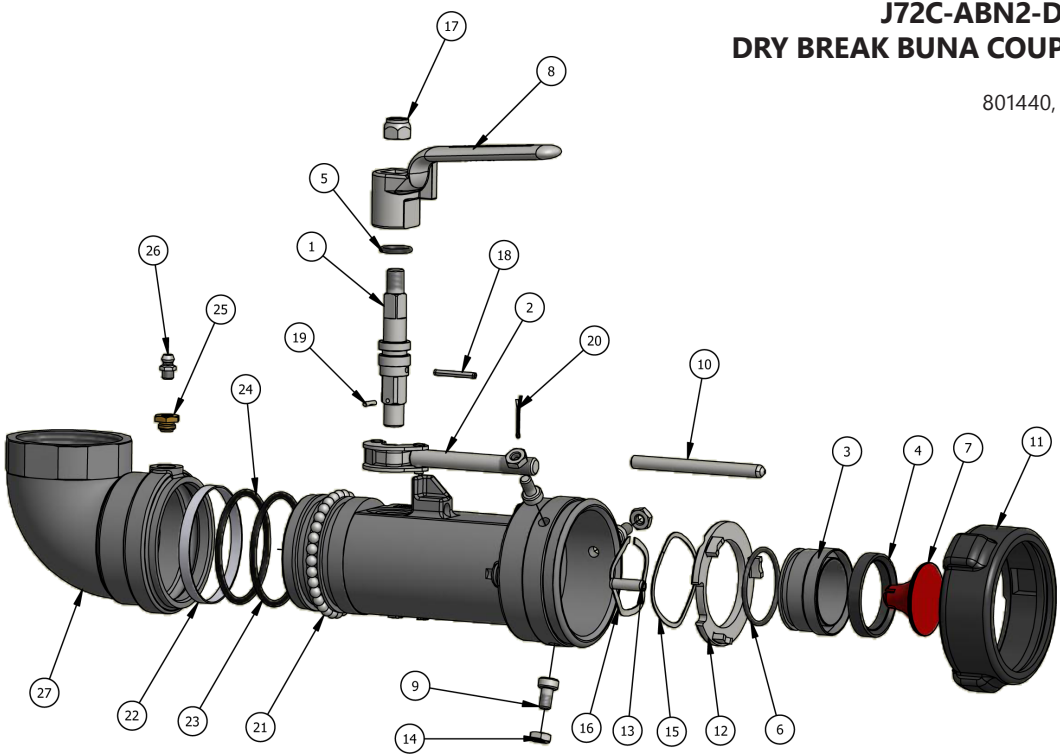

J72C-ABN2-D003 DRY BREAK BUNA COUPLER KITS

ITEM	QTY	PART #	DESCRIPTION	NOSE SEAL KIT 800412	FRONT END SEAL KIT 800174	CROSS SHAFT SEAL KIT 299786	SWIVEL SEAL KIT 299803	OVERHAUL KIT 801457
1	1	800862	SHAFT					
2	1	490997	LINK AND STEM ASSY					
3	1	577635	NOSE PIECE					
4	1	401091	NOSE SEAL	■	■			■
5	1	407857	O-RING			■		■
6	1	480012	O-RING	■	■			■
7	1	401082	POPPET					
8	1	401110	LEVER					
9	3	401104	BAYONET STUD		■			■
10	1	401087	INTERLOCK PIN					
11	1	563398	BUMPER RING		■			■
12	1	401089	INTERLOCK PLATE					
13	1	470042	SPRING PIN		■			■
14	3	470040	HEX NUT		■			■
15	1	401106	WAVE WASHER		■			■
16	1	800890	WAVE SPRING		■			■
17	1	470043	HEX NUT			■		■
18	1	470061	SPRING PIN			■		■
19	1	565629	GROOVED PIN			■		■
20	1	470045	COTTER PIN	■	■			■
21	32	470036	BALL BEARING				■*	■*
22	1	401101	BEARING STRIP				■	■
23	1	405276	DUST O-RING				■	■
24	1	407855	PRODUCT O-RING				■	■
25	1	566191	BALL RETAINER				■	■
26	3	578010	SCREW					
27	1	401102	SWIVEL BODY					
28	1	453807	LUBE FITTING				■	■

* -QTY. 6 REPLACEMENT BALLS PROVIDED IN KIT

J72C-ABN2-D003
DRY BREAK BUNA COUPLER

801434, Rev.A

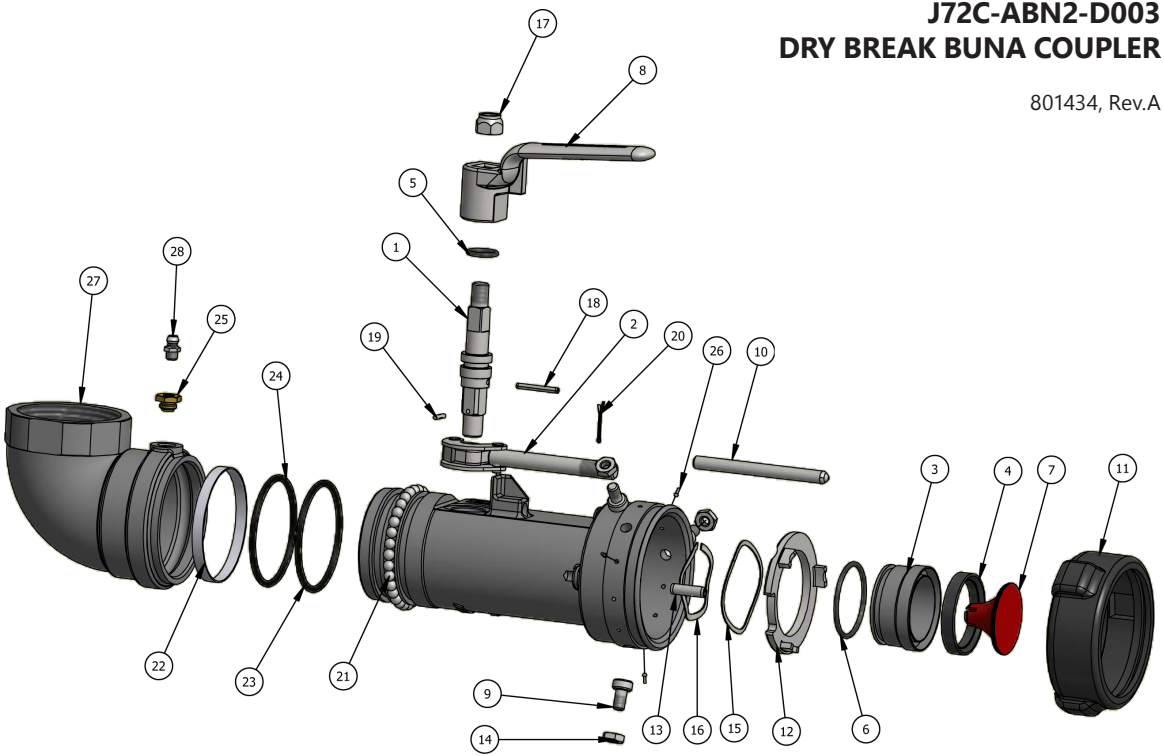

J72C-SBI0-C DRY BREAK BUNA COUPLER KITS

ITEM	QTY	PART #	DESCRIPTION	NOSE SEAL KIT 800412	FRONT END KIT 800909	CROSS SHAFT SEAL KIT 800942	OVERHAUL KIT 801486
1	1	299988	LINK & STEM ASSY				
2	1	577641	GASKET				■
3	1	800860	SHAFT				
4	1	800250	BEARING				
5	1	401110	LEVER				
6	3	401104	BAYONET STUD		■		■
7	3	470040	HEX NUT		■		■
8	1	401087	INTERLOCK PIN				
9	1	401089	INTERLOCK PLATE				
10	1	401106	WAVE WASHER		■		■
11	1	470043	HEX NUT			■	■
12	1	470042	SPRING PIN		■		■
13	1	563398	BUMPER RING		■		■
14	1	470045	COTTER PIN	■	■		■
15	1	299982	BEARING			■	■
16	1	299983	NOSE PIECE				
17	1	480012	O-RING	■	■		■
18	1	800172	WAVE SPRING		■		■
19	1	800861	E-CLIP			■	■
20	1	401091	NOSE SEAL	■	■		■
21	1	401117	POPPET				
22	2	299980	BEARING			■	■
23	1	299970	WASHER			■	■
24	1	407857	O-RING			■	■
25	1	299981	WASHER			■	■

J72C-SBI0-C
DRY BREAK BUNA COUPLER

801528, Rev.A

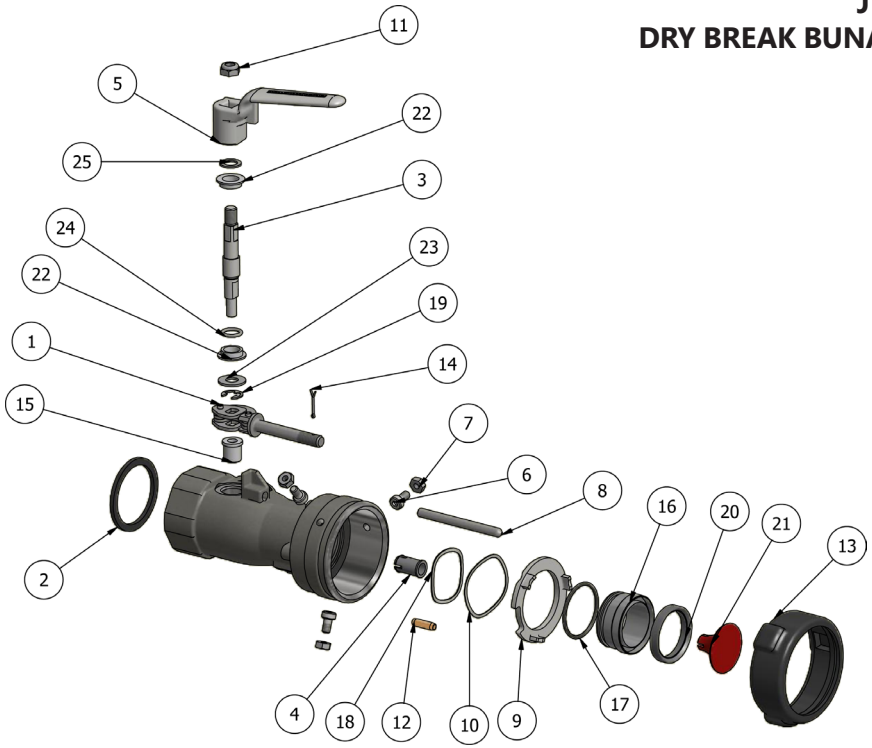

J72C-SBN0-C DRY BREAK BUNA COUPLER KITS

ITEM	QTY	PART #	DESCRIPTION	NOSE SEAL KIT 800412	FRONT END KIT 800909	CROSS SHAFT SEAL KIT 800942	OVERHAUL KIT 801485
1	1	299988	LINK & STEM ASSY				
2	1	800860	SHAFT				
3	1	800250	BEARING				
4	1	401110	LEVER				
5	3	401104	BAYONET STUD		■		■
6	3	470040	HEX NUT		■		■
7	1	401087	INTERLOCK PIN				
8	1	401089	INTERLOCK PLATE				
9	1	401106	WAVE WASHER		■		■
10	1	470043	HEX NUT			■	■
11	1	470042	SPRING PIN		■		■
12	1	563398	BUMPER RING		■		■
13	1	470045	COTTER PIN	■	■		■
14	1	299982	BEARING			■	■
15	1	299983	NOSE PIECE				
16	1	480012	O-RING	■	■		■
17	1	800172	WAVE SPRING		■		■
18	1	800861	E-CLIP			■	■
19	1	401091	NOSE SEAL	■	■		■
20	1	401117	POPPET				
21	2	299980	BEARING			■	■
22	1	299970	WASHER			■	■
23	1	407857	O-RING			■	■
24	1	299981	WASHER			■	■

J72C-SBN0-C
DRY BREAK BUNA COUPLER

801529, Rev.A

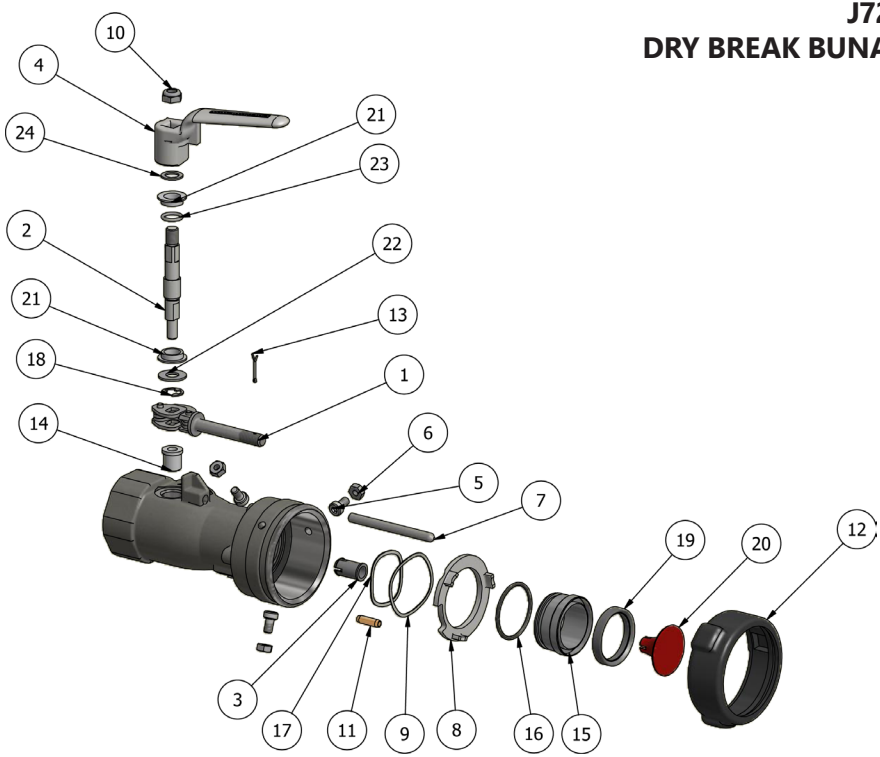

J72C-SBN0-C010 DRY BREAK BUNA COUPLER KITS

ITEM	QTY	PART #	DESCRIPTION	NOSE SEAL KIT 800412	FRONT END KIT 800920	CROSS SHAFT SEAL KIT 800942	OVERHAUL KIT 801490
1	1	299988	LINK & STEM ASSY				
2	1	800860	SHAFT				
3	1	800250	BEARING				
4	1	401110	LEVER				
5	4	401104	BAYONET STUD		■		■
6	4	470040	HEX NUT		■		■
7	1	401087	INTERLOCK PIN				
8	1	401106	WAVE WASHER		■		■
9	1	470043	HEX NUT			■	■
10	1	470042	SPRING PIN		■		■
11	1	470045	COTTER PIN	■	■		■
12	1	299982	BEARING			■	■
13	1	299983	NOSE PIECE				
14	1	480012	O-RING	■	■		■
15	1	800172	WAVE SPRING		■		■
16	1	800861	E-CLIP			■	■
17	1	401091	NOSE SEAL	■	■		■
18	1	401117	POPPET				
19	2	299980	BEARING			■	■
20	1	299970	WASHER			■	■
21	1	407857	O-RING			■	■
22	1	401088	BUMPER RING		■		■
23	1	564059	INTERLOCK PLATE				
24	1	299981	WASHER			■	■

J72C-SBN0-C010
DRY BREAK BUNA COUPLER

801530, Rev.A

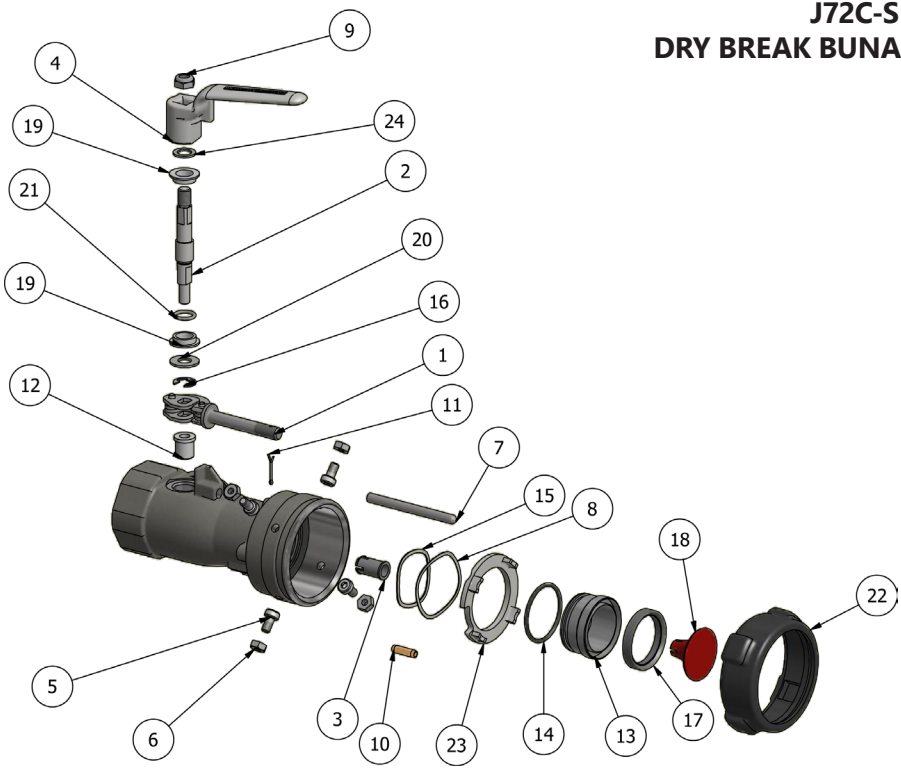

J72C-SBN1-C DRY BREAK BUNA COUPLER KITS

ITEM	QTY	PART #	DESCRIPTION	NOSE SEAL KIT 800412	FRONT END KIT 800909	CROSS SHAFT SEAL KIT 800942	OVERHAUL KIT 801488
1	1	299988	LINK & STEM ASSY				
2	1	800860	SHAFT				
3	1	800250	BEARING				
4	1	401110	LEVER				
5	3	401104	BAYONET STUD		■		■
6	3	470040	HEX NUT		■		■
7	1	401087	INTERLOCK PIN				
8	1	401089	INTERLOCK PLATE				
9	1	401106	WAVE WASHER		■		■
10	1	470043	HEX NUT			■	■
11	1	470042	SPRING PIN		■		■
12	1	563398	BUMPER RING		■		■
13	1	470045	COTTER PIN	■	■		■
14	1	299982	BEARING			■	■
15	1	299983	NOSE PIECE				
16	1	480012	O-RING	■	■		■
17	1	800172	WAVE SPRING		■		■
18	1	800861	E-CLIP			■	■
19	1	401091	NOSE SEAL	■	■		■
20	1	401117	POPPET				
21	2	299980	BEARING			■	■
22	1	299970	WASHER			■	■
23	1	407857	O-RING			■	■
24	1	299981	WASHER			■	■
25	32	801463	BALL BEARING				■*
26	1	801467	PRODUCT O-RING				■
27	1	801465	SET SCREW				■

* -QTY. 6 REPLACEMENT BALLS PROVIDED IN KIT

J72C-SBN1-C
DRY BREAK BUNA COUPLER

801531, Rev.A

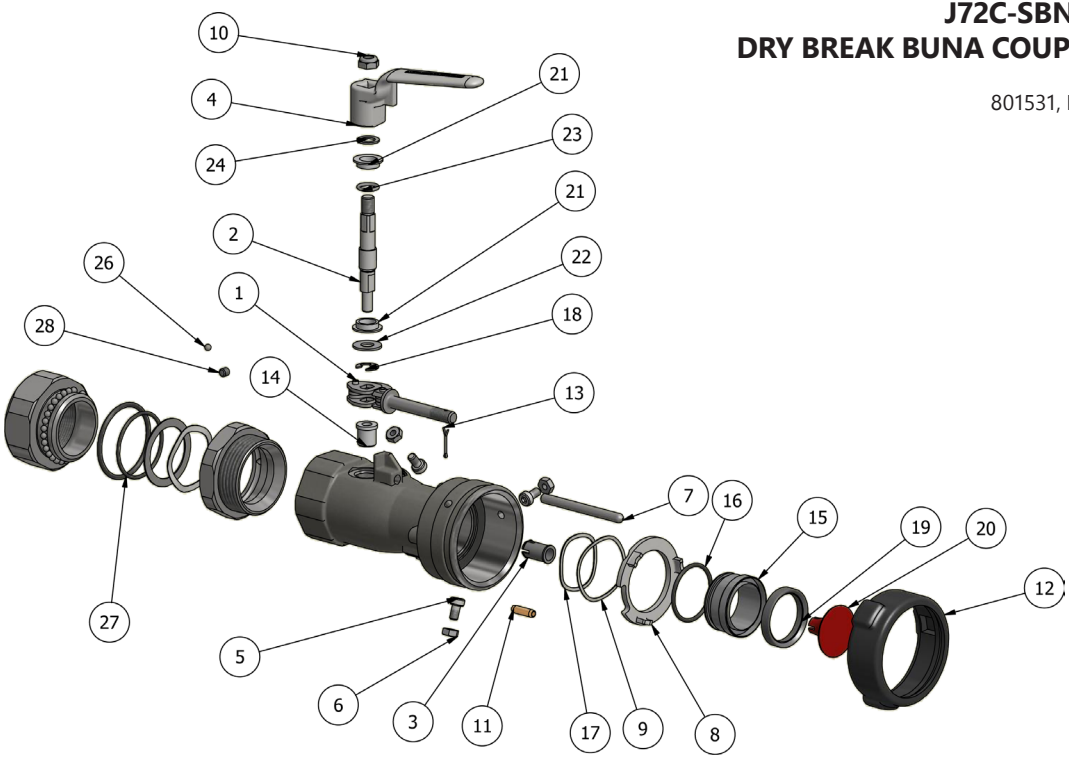

J72C-APN0-D DRY BREAK CHEMRAZ COUPLER KITS

ITEM	QTY	PART#	DESCRIPTION	NOSE SEAL KIT 800414	FRONT END KIT 800178	CROSS SHAFT SEAL KIT 299788	OVERHAUL KIT 801458
1	1	800862	SHAFT				
2	1	490997	LINK & STEM ASSY				
3	1	577635	NOSE PIECE				
4	1	564735	O-RING	■	■		■
5	1	401082	POPPET				
6	1	401110	LEVER				
7	3	401104	BAYONET STUD		■		■
8	1	401087	INTERLOCK PIN				
9	1	563398	BUMPER RING		■		■
10	1	401089	INTERLOCK PLATE				
11	1	470042	SPRING PIN		■		■
12	3	470040	HEX NUT		■		■
13	1	401106	WAVE WASHER		■		■
14	1	800890	WAVE SPRING		■		■
15	1	470043	HEX NUT			■	■
16	1	470061	SPRING PIN			■	■
17	1	565629	GROOVED PIN			■	■
18	1	470045	COTTER PIN	■	■		■
19	1	564656	NOSE SEAL	■	■		■
20	1	564736	O-RING			■	■

J72C-APN0-D
DRY BREAK CHEMRAZ COUPLER

801391, Rev.A

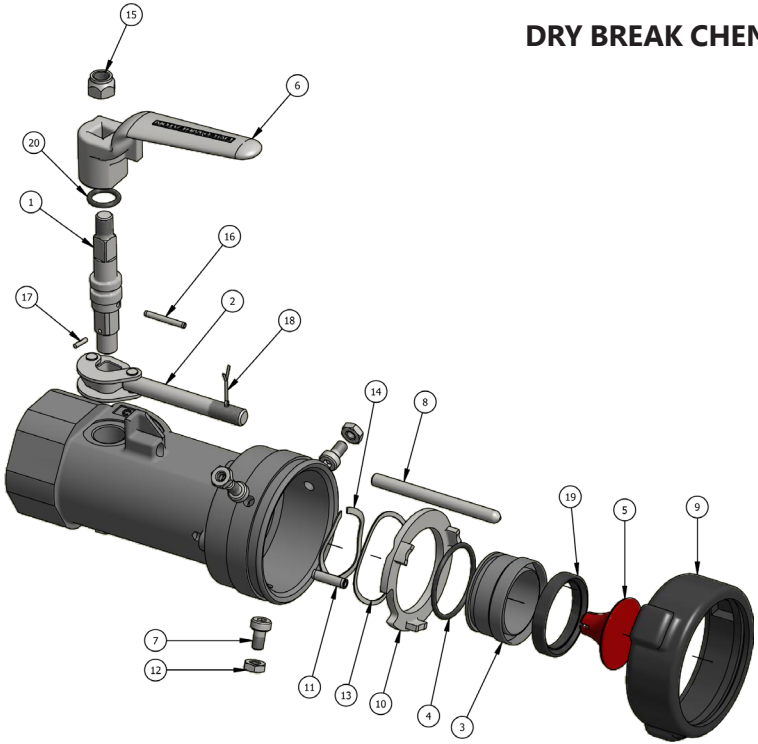

J72C-SPI0-C DRY BREAK CHEMRAZ COUPLER KITS

ITEM	QTY	PART #	DESCRIPTION	NOSE SEAL KIT 800414	FRONT END KIT 800912	CROSS SHAFT SEAL KIT 800956	OVERHAUL KIT 801494
1	1	299988	LINK & STEM ASSY				
2	1	800860	SHAFT				
3	1	299989	GASKET				■
4	1	800250	BEARING				
5	1	401110	LEVER				
6	3	401104	BAYONET STUD		■		■
7	3	470040	HEX NUT		■		■
8	1	401087	INTERLOCK PIN				
9	1	401089	INTERLOCK PLATE				
10	1	401106	WAVE WASHER		■		■
11	1	470043	HEX NUT			■	■
12	1	470042	SPRING PIN		■		■
13	1	563398	BUMPER RING		■		■
14	1	470045	COTTER PIN	■	■		■
15	1	299982	BEARING			■	■
16	1	299983	NOSE PIECE				
17	1	564735	O-RING	■	■		■
18	1	800172	WAVE SPRING		■		■
19	1	800861	E-CLIP			■	■
20	1	564656	NOSE SEAL	■	■		■
21	1	401117	POPPET				
22	2	299980	BEARING			■	■
23	1	299970	WASHER			■	■
24	1	564736	O-RING			■	■
25	1	299981	WASHER			■	■

J72C-SPI0-C
DRY BREAK CHEMRAZ COUPLER

801532, Rev.A

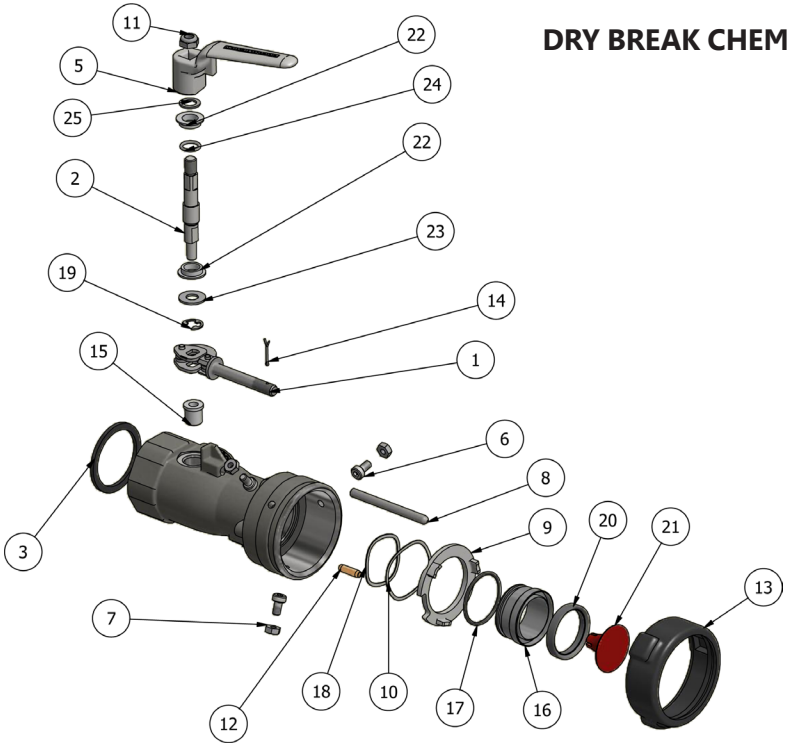

J72C-SPN0-C DRY BREAK CHEMRAZ COUPLER KITS

ITEM	QTY	PART#	DESCRIPTION	NOSE SEAL KIT 800414	FRONT END KIT 800912	CROSS SHAFT SEAL KIT 800956	OVERHAUL KIT 801493
1	1	299988	LINK & STEM ASSY				
2	1	800860	SHAFT				
3	1	577641	BUNA				
4	1	800250	BEARING				
5	1	401110	LEVER				
6	3	401104	BAYONET STUD		■		■
7	3	470040	HEX NUT		■		■
8	1	401087	INTERLOCK PIN				
9	1	401089	INTERLOCK PLATE				
10	1	401106	WAVE WASHER		■		■
11	1	470043	HEX NUT			■	■
12	1	470042	SPRING PIN		■		■
13	1	563398	BUMPER RING		■		■
14	1	470045	COTTER PIN	■	■		■
15	1	299982	BEARING			■	■
16	1	299983	NOSE PIECE				
17	1	564735	O-RING	■	■		■
18	1	800172	WAVE SPRING		■		■
19	1	800861	E-CLIP			■	■
20	1	564656	NOSE SEAL	■	■		■
21	1	401117	POPPET				
22	2	299980	BEARING			■	■
23	1	299970	WASHER			■	■
24	1	564736	O-RING			■	■
25	1	299981	WASHER			■	■

J72C-SPN0-C
DRY BREAK CHEMRAZ COUPLER

801533, Rev.A

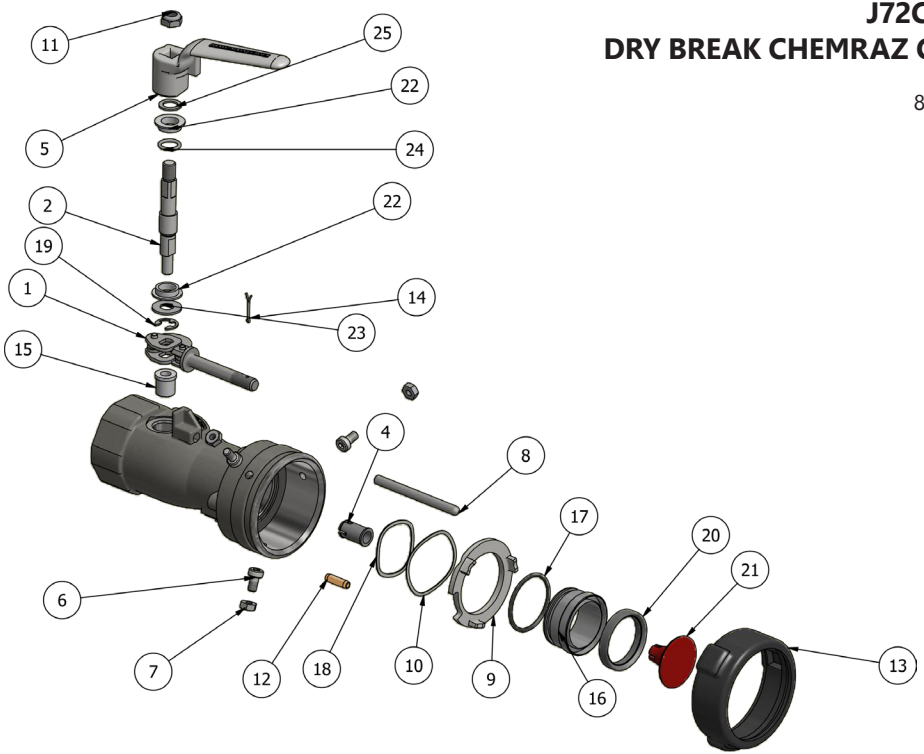

J79C SERIES COUPLERS

For all J79 coupler series please refer to the chart for the equivalent J72 coupler part numbers. To review individual parts and kit availability please see page number for information.

Part #	Equivalent to	Page #
J79C-ABN0-D	J72C-ABN0-D	58-59
J79C-ABN0-D001	J72C-ABN0-D001	60-61
J79C-AVN0-D	J72C-AVN0-D	12-13
J79C-AVN1-D001	J72C-AVN1-D001	24-25
J79C-AVN1-D	J72C-AVN1-D	22-23
J79C-AVN1-D001	J72C-AVN1-D001	24-25
J79C-SVN0-C	J72C-SVN0-C	40-41

All individual parts for the J79 couplers are identical to the corresponding J72 coupler with the exception of a stainless steel NPT Bushing at the inlet, part no. 801110.

801543, Rev.A

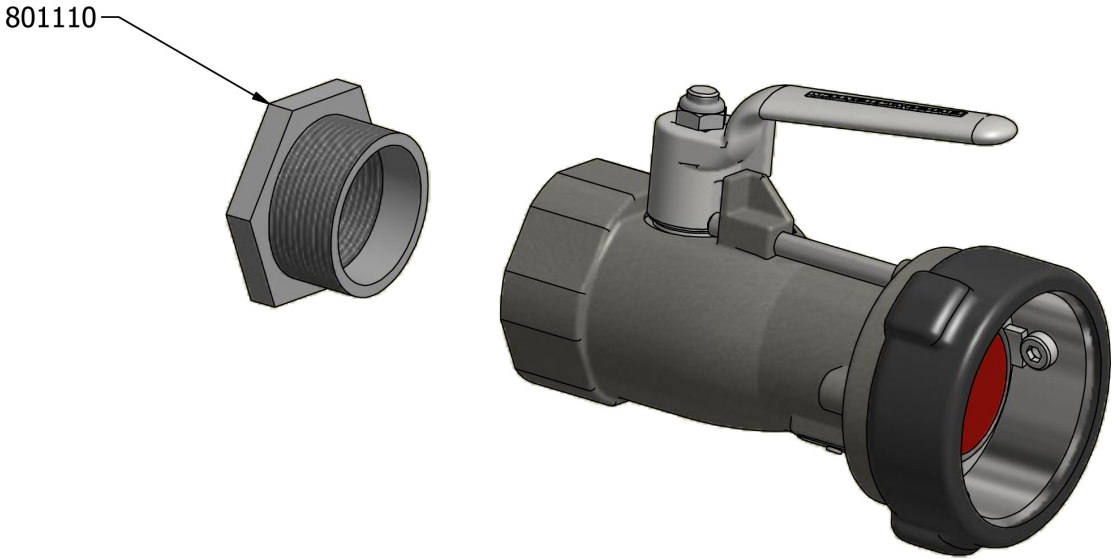

TERMS & CONDITIONS

MINIMUM ORDER = $100.00 US. A surcharge representing the difference between the order value and $100.00 will be added to all orders less than the minimum. All sales in US Dollars unless pre-arranged.
PAYMENT TERMS: Net 30 days to established customers. To establish an account give us a call. We also accept C.O.D orders, VISA, MASTERCARD, or Letter of Credit.
ORDER BY PHONE, E-MAIL, FAX OR MAIL. Please include your purchase order no. and name of authorized buyer, your "Ship to" address if different from your billing address, and a complete product description including model no. and quantity.
CERTIFICATES OF CONFORMANCE: For customer requested certificate of conformance, a minimum charge of $50.00 US will be applied per order.

WARRANTY
All Emco Wheaton Corp. products are warranted free from defect in material and workmanship under normal use and service for a period of twelve (12) months from the date of manufacture. The warranty set forth herein shall be exclusive warranty made by Emco Wheaton Corp. in lieu of all other warranties, expressed or implied, whether written or oral, including but limited to any implied warranty of merchantability or fitness for any particular purpose. Emco Wheaton Corp.'s liability under this warranty is limited to, at Emco Wheaton Corp's option, the repair or replacement of that part which proves to be defective within twelve (12) months of date of manufacture. Emco Wheaton Corp. is not responsible for claims for damage due to improper installation or maintenance, corrosive fluids, or use of a product for a purpose other than it was specifically designed for. Emco Wheaton Corp. shall have no liability or be required to fulfill any obligation under this warranty unless the original purchaser permits Emco Wheaton Corp. to inspect the item to determine whether the claimed defect is covered by this warranty.
Under no circumstances shall Emco Wheaton Corp. be liable for any consequential, special, or contingent damages or expenses, or any other charges beyond the invoice value of the defective items. The remedies set forth herein shall be the exclusive remedies available to the user and are in lieu of all other remedies. This Warranty statement supersedes all previous programs.
STANDARD GARDNER DENVER TERMS AND CONDITIONS APPLY TO ALL ACCEPTED ORDERS (Available upon request)

p/n 801526 (Nov.2013)

Emco Wheaton Corp.
2390 South Service Road West, Oakville, Ontario L6L 5M9, Canada
t. 905 829 8619 **f.** 905 829 8620 **e.** assist@emcowheaton.com www.emcowheaton.com
ISO 9001: 2008 Certified