# Self-Priming Diaphragm Pumps

Model 337G-96




Model 338E-96




- **Sand Cast Aluminum Construction for Portability and Durability**
- **Thermoplastic Santoprene Diaphragm**
- **2˝ or 3˝ NPT Suction and Discharge Ports**
- **Self-Priming to 25 Ft. Lift**
- **Solids Handling and Dirty Water Design**
- **Maximum Solids Handling up to 1-5/8˝**
- **Modular Component Design Permits Easy Maintenance and Cleanout**
- **Driver Options: Gasoline or Electric Single & Three Phase Motors**
- **Delivers up to 90 GPM**
- **90° Rotatable Base on All Models**

The AMT line of Diaphragm pumps features a 2-stage, heavy duty forged gear driven transmission. Often referred to as Mud or Sludge Pumps, diaphragm pumps are designed to pump mud, slurry, sewage and thick liquids that have the ability to flow. AMT Diaphragm pumps are available with a choice of drivers to meet your application requirements: gasoline, diesel or single or three phase electric motor. Built-in check valve assures self-priming to 20 feet after initial prime. Heavy duty forged gear driven transmission is designed to operate pump at 40 strokes per minute for electric motor models and 60 strokes per minute for engine driven models. Each unit includes a 2" or 3" NPT steel suction strainer, two NPT nipples and a wheel kit for portability. Models 337E-K6, 337H-K6, 338E-K6 and 338G-K6 are kits provided less motor or engine. **Suction and discharge port sizes cannot be reduced.**

## Performance of Diaphragm Pumps

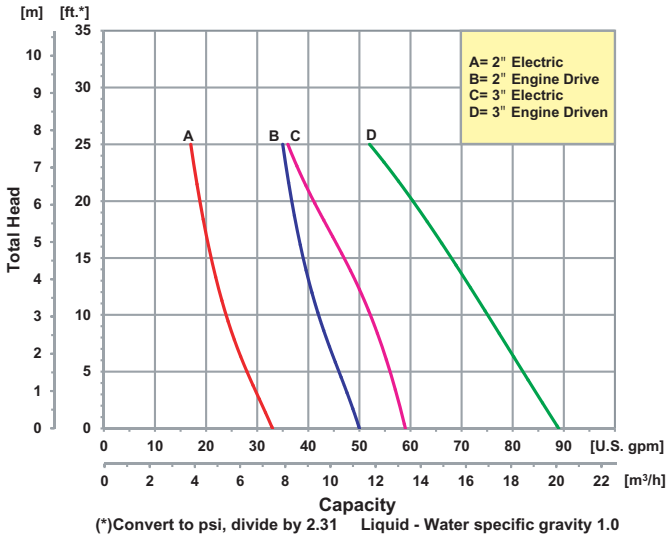


(*)Convert to psi, divide by 2.31 Liquid - Water specific gravity 1.0

JME ELLSWORTH
A John M. Ellsworth Company
John M. Ellsworth Co., Inc.

P.O. Box 240072
8700 West Bradley Road
Milwaukee, WI 53224

800·333·3331 PHONE

info@jmesales.com E-MAIL
www.JMEsales.com WEB

# Self-Priming Diaphragm Pumps

## 2" Self-Priming Diaphragm Pumps

| Model | Curve | Driver | Run Time (Hours) | Tank Size (Gal/Ltr.) | Ship Wt. (Lbs.) |
|---|---|---|---|---|---|
| 338G-96 | B | Honda GX120 | 2.0 | 0.52/2.0 | 165 |
| 338G-K6 | B | Kit, Less Engine | 2.0 | N/A | 135 |
| 338L-96 | B | LCT 208CC | 2.2 | 0.71/2.7 | 165 |
| 338E-96 | A | 1.5 HP 1 Phase Electric | N/A | N/A | 175 |
| 338T-96 | A | 1.5 HP 3 Phase Electric | N/A | N/A | 175 |
| 338E-K6 | A | Kit, Less Motor | N/A | N/A | 135 |

| Model | SUC* | DIS* | L** | W | H** |
|---|---|---|---|---|---|
| 338G-96 | 2” | 2” | 43.4 [110.1] | 22.1 [56.1] | 23.2 [59.0] |
| 338G-K6 | 2” | 2” | N/A | 22.1 [56.1] | 23.2 [59.0] |
| 338L-96 | 2" | 2” | 44.1 [112.0] | 22.1 [56.1] | 23.2 [59.0] |
| 338E-96 | 2” | 2” | 44.1 [112.0] | 22.1 [56.1] | 23.2 [59.0] |
| 338T-96 | 2” | 2” | 44.1 [112.0] | 22.1 [56.1] | 23.2 [59.0] |
| 338E-K6 | 2” | 2” | N/A | 22.1 [56.1] | 23.2 [59.0] |

**Maximum Solids Handling Capacity: 1-1/4" Diameter**

336E/335E-96 Motors: 115/208-230 VAC, 1 Phase, 15.8 Amp, 60 Hz; 110/220 VAC 50 Hz, 17 Amps

## 3" Self-Priming Diaphragm Pumps

| Model | Curve | Driver | Run Time (Hours) | Tank Size (Gal/Ltr.) | Ship Wt. (Lbs.) |
|---|---|---|---|---|---|
| 337G-96 | D | Honda GX120 | 2.0 | 0.52/2.0 | 175 |
| 337H-96 | D | Honda GX160 | 2.5 | 0.82/3.1 | 185 |
| 337H-K6 | D | Kit, Less Engine | N/A | N/A | 145 |
| 337L-96 | D | LCT 208CC | 2.2 | 0.71/2.7 | 185 |
| 337E-96 | C | 1.5 HP 1 Phase Electric | N/A | N/A | 185 |
| 337T-96 | C | 1.5 HP 3 Phase Electric | N/A | N/A | 185 |
| 337E-K6 | C | Kit, Less Motor | N/A | N/A | 145 |

| Model | SUC* | DIS* | L** | W | H** |
|---|---|---|---|---|---|
| 337G-96 | 3” | 3” | 43.4 [110.1] | 26.4 [67.0] | 23.4 [59.4] |
| 337H-96 | 3” | 3” | 43.9 [111.6] | 26.4 [67.0] | 24.1 [61.1] |
| 337H-K6 | 3” | 3” | N/A | 26.4 [67.0] | 23.4 [59.4] |
| 337L-96 | 3” | 3” | 44.1 [112.0] | 26.4 [67.0] | 23.4 [59.4] |
| 337E-96 | 3” | 3” | 44.1 [112.0] | 26.4 [67.0] | 23.4 [59.4] |
| 337T-96 | 3” | 3” | 44.1 [112.0] | 26.4 [67.0] | 23.4 [59.4] |
| 337E-K6 | 3” | 3” | N/A | 26.4 [67.0] | 23.4 [59.4] |

**Construction: Sand Cast Aluminum**
▲ Oil Alert Included
❖ Includes 20AMP 3-Prong Plug

**Maximum Solids Handling Capcity: 1- 5/8” Diameter**

(*) Standard NPT (Female) pipe thread.
(**) This dimension may vary due to motor manufacturer's speciifcations.
NOTE: Dimensions are in inches (centimeters) and have a tolerance of ± 1/8”)

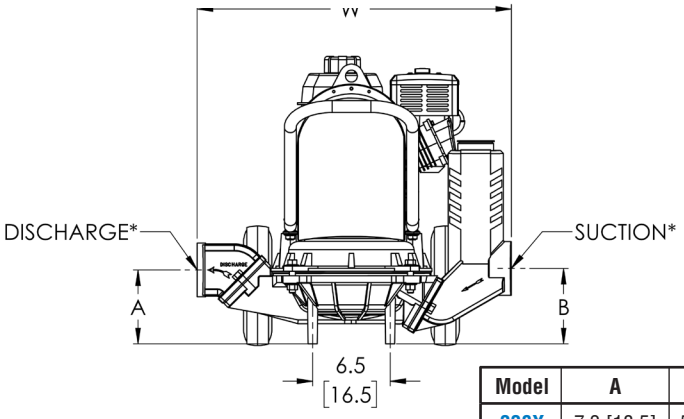


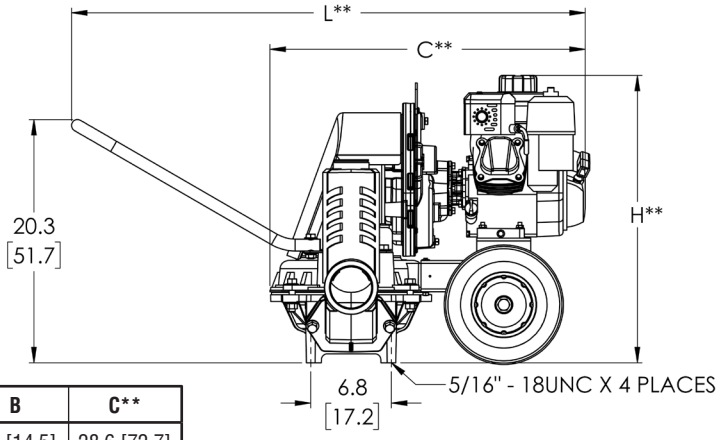


| Model | A | B | C** |
|---|---|---|---|
| 338X | 7.3 [18.5] | 5.7 [14.5] | 28.6 [72.7] |
| 337X | 6.2 [15.7] | 6.3 [16.0] | 28.6 [72.7] |

• Model shown with Gaslone Engine

## Standard Features

- Driver Options: Gasoline, Diesel or Electric Single & Three Phase Motors
- 2" to 3" NPT Port Sizes
- Maximum Temperature 180° F
- Models 338E-96/337E-96—1.5 HP Single Phase, 115/230 VAC Volt Motor with Manual Reset Overload
- Models 338E-96/339T-96—1.5 HP Three Phase, 230/460 VAC Volt Motor (Plug & Switch Not Included)
- Models 338G-K6/337H-K6—Kit Furnished Less Engine. For use with Gasoline or Diesel Engines with 0.75" Keyed Shaft (SAE J609a Mounting Flange)
- Models 338E-K6/337E-K6—Kit Furnished Less Motor. For use with Electric Motor (1725 RPM) or Air Motor with a Minimum of 1.5 HP (56C Mounting Flange Required)

0123