Model 25FP13HR

Model 25FP23HR

2-1/2″ Prime Assist Engine Driven High Pressure/Fire Pumps

- ***Aluminum Construction with Replaceable Wear Ring***
- ***Viton® Mechanical Seal with Silicon Carbide & Carbon Faces***
- ***2-1/2″ NPT Port Sizes***
- ***Hand Primer Included***
- ***Prime Assist to 19 Ft.***
- ***Built-in Discharge Check Valve***
- ***Discharge Pressure Gauge Included***
- ***Suction Strainer, Nipples and Heavy Duty Steel Roll Frame with Battery Tray Included***
- ***Maximum Head up to 165 PSI/ 380' TDH***
- ***Delivers to 270 GPM***
- ***Available with Honda Gasoline or Hatz Diesel with 12 Volt DC Electric Start***
- ***Optional NPT to Fire Hose Thread Available – See Accessories Page***
- ***Optional Wheel Kit Available***

The IPT Engine Driven line of High Pressure/Fire pumps deliver excellent pressure and flow for use in many applications including: fire protection, emergency fire fighting, washdown and AG/Sprinkler. Portable units feature metal fuel tanks installed on engine or frame depending on model. 12 Volt DC electric start engines with recoil starter from, Honda Gasoline or Hatz Diesel engines are standard on these pumps. Vanguard models feature built-in exhaust prime. Honda and Yanmar models feature a manual hand prime. These pumps are equipped with Viton® Silicon Carbide/Carbon seal and Viton® O-rings/gaskets.

Performance of 2½" High Pressure Fire Fighting Pumps

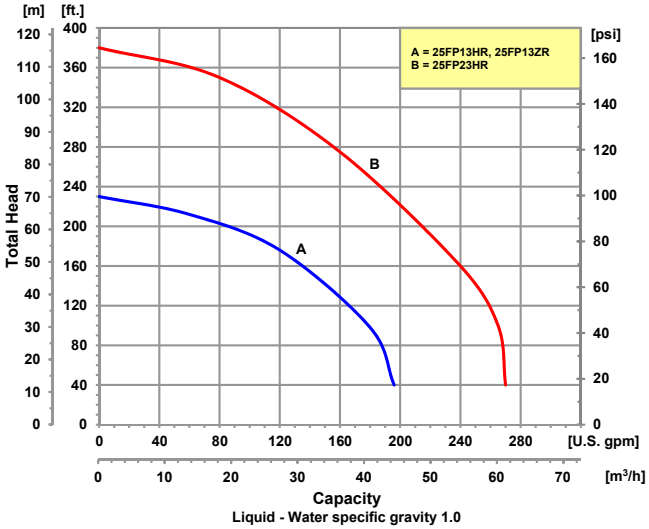

JME ELLSWORTH
A John M. Ellsworth Company
John M. Ellsworth Co., Inc.

P.O. Box 240072
8700 West Bradley Road
Milwaukee, WI 53224

800·333·3331 PHONE

info@jmesales.com E-MAIL
www.JMEsales.com WEB

Prime Assist High Pressure/Fire Pumps

Pump Dimensional & Specification Data

Model	Curve	Driver	Seal Types & Elastomers/Faces	Prime Feature	Tank Size (Gal/Ltr)	Run Time (Hr.)	Ship Wt. (Lbs.)
25FP13ZR	A	Hatz 1B50 ▲++	Viton Silicon Carbide/Carbon	Hand	1.32/5.0	1.8	295
25FP13HR	A	Honda GX390 ▲++	Viton Silicon Carbide/Carbon	Hand	1.6/6.1	2.5	200
25FP23HR	B	Honda GX690 23HP ▲++	Viton Silicon Carbide/Carbon	Hand	15/56.8	10.5	290

Construction: Aluminum

▲ Oil Alert Included

++ Electric Start

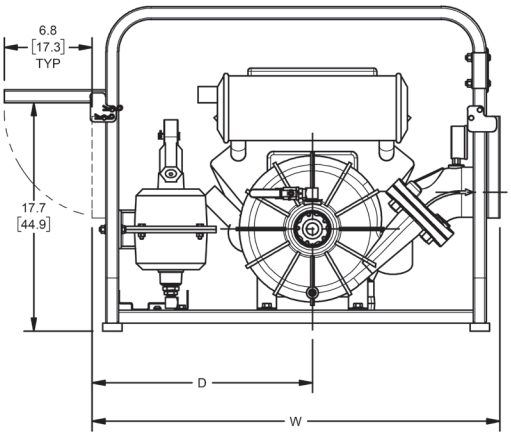

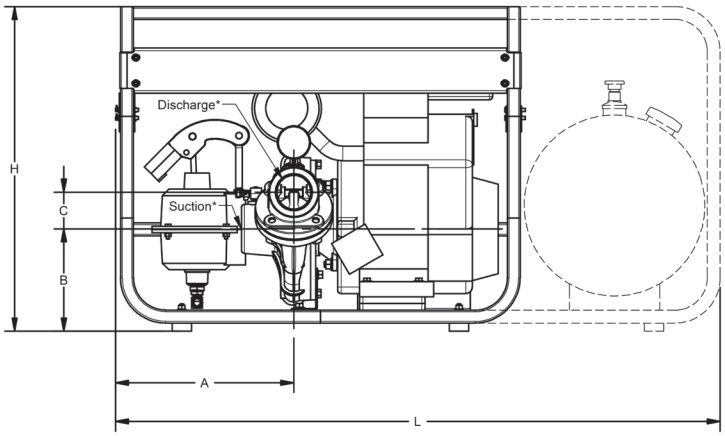

Hand Primer Not Shown for Model 25FP13HR and 25FP13ZR

Model	HP Class	SUC*	DIS*	A	B	C	L	W	H
25FP13ZR	13 HP	2½	2½	13.3 [33.7]	8.1 [20.6]	4.6 [11.7]	31.8 [80.8]	31.6 [80.3]	25.1 [63.8]
25FP13HR	13 HP	2½	2½	13.3 [33.7]	6.8 [17.4]	4.6 [11.7]	31.8 [80.8]	31.6 [80.3]	25.1 [63.8]
25FP23HR	23 HP	2½	2½	13.8 [35.2]	7.9 [20.1]	2.8 [7.2]	46.90 [104.3]	31.6 [80.3]	25.1 [63.8]

(◆) HP Class represents market category and is not intended to define actual horsepower
(*) Standard NPT (Male) pipe thread.
NOTE: Dimensions are in inches (centimeters) and have a tolerance of ± 1/8"
(†) Minimal Assembly Required: Auxiliary Fuel Tank Shipped Uninstalled

Standard Features

- Aluminum Construction with Replaceable Hard Coat Anodized Wear Ring
- Viton® Mechanical Seal with Silicon Carbide & Carbon Faces
- 2-1/2" NPT Suction & Discharge Ports
- Includes Hand Primer
- Built-in Discharge Check Valve
- Discharge Pressure Gauge Included
- Choice of Briggs & Stratton Vanguard, Honda Gasoline or Hatz Diesel Engines with 12 Volt DC Electric Start
- Maximum Temperature 200° F
- Optional NPT to Fire Hose Thread Available – See Accessories Page
- Heavy Duty Steel Roll Frame with Battery Tray Included
- Optional High Pressure Hose Kit or Wheel Kit Available