

Model 4789-95

1-1/2˝ Engine Driven Self-Priming Two Stage High Pressure Pumps

- ***Cast Iron Construction with Stainless Steel Closed Impellers***
- ***Buna-N Mechanical Seal and O-Ring***
- ***1-1/2˝ NPT Port Size***
- ***Self-Priming****
- ***Engine Options: Honda GX160***
- ***Maximum Flow up to 68 GPM***
- ***Maximum Head up to 90 PSI***
- ***Heavy Duty Steel Roll Frame Included***
- ***Wheel Kit Available***

*Requires Foot Valve (Included) Above 10 Ft.

The AMT line of Engine Driven High Pressure pumps is designed for lawn sprinkling, agricultural spraying, dewatering, fire fighting, emergency water supply and pressure boosting. Two-stage models feature cast iron diffusers and 300 series stainless steel investment cast impellers producing up to 90 PSI that generally requires 8 horsepower or more from a single stage pump. Pumps offer a broad selection of gasoline engines from the leading engine manufacturer with dependable service worldwide. All models include: cast iron pipe nipples, strainer/ foot valve and rugged heavy duty steel roll frame for protection and durability.

Performance of Engine Driven High Pressure Pumps

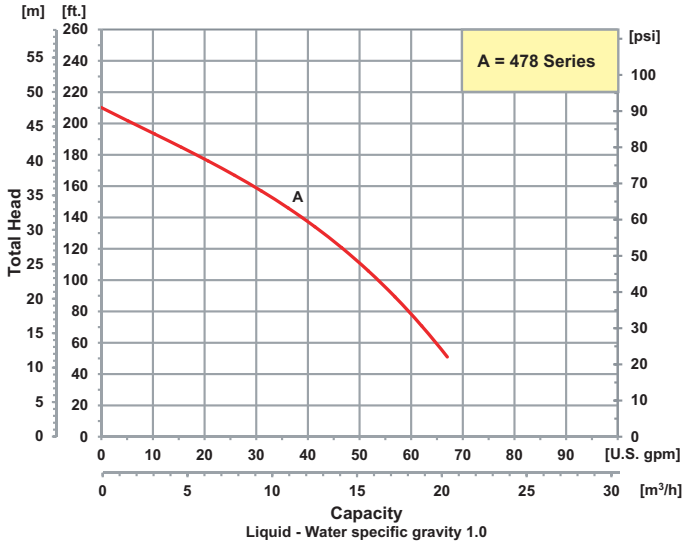

JME ELLSWORTH
A John M. Ellsworth Company
John M. Ellsworth Co., Inc.

P.O. Box 240072
8700 West Bradley Road
Milwaukee, WI 53224

800·333·3331 PHONE

info@jmesales.com E-MAIL
www.JMEsales.com WEB

Pump Dimensional & Specification Data

Model	Driver	Seal Type & Elastomer/Faces	Tank Size (Gal/Ltr)	Run Time (Hr.)	Ship Wt. (Lbs.)
4789-95	Honda GX160▲	Buna-N	0.82 / 3.1	2.0	100

Construction: Cast Iron with Stainless Steel Impellers

▲ Oil Alert Included

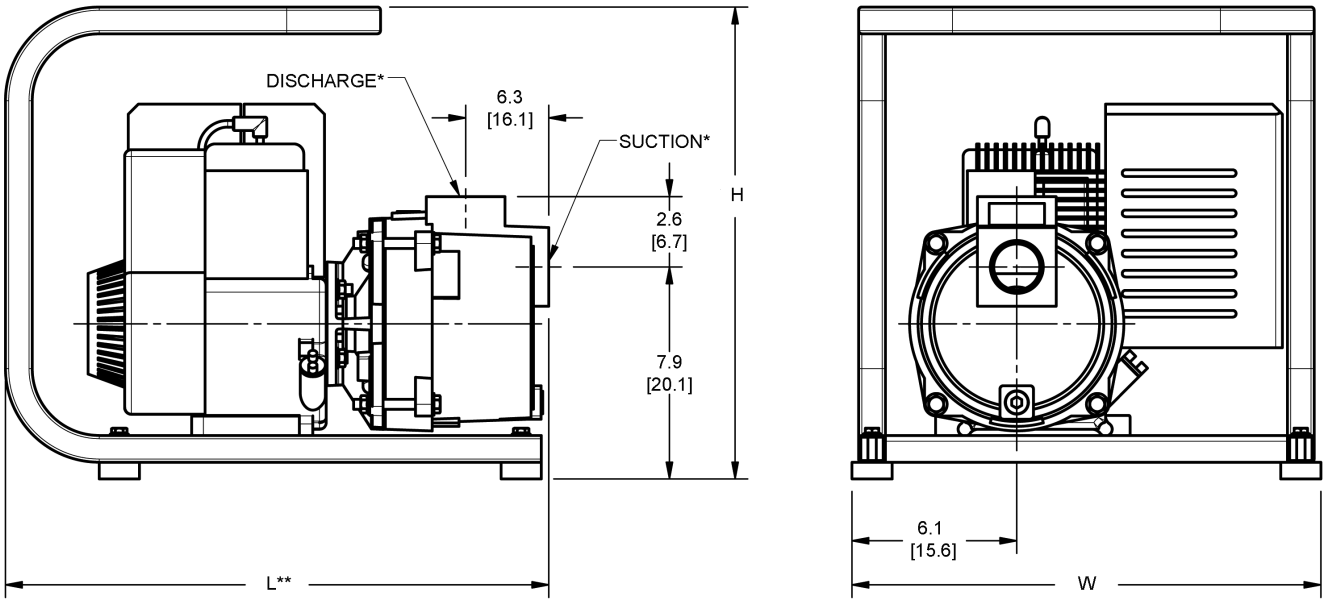

Model	HP Class♦	SUC*	DIS*	L**	W	H
4789-95	5 HP	1½	1½	20.2 [51.3]	17.5 [44.4]	17.6 [44.7]

(♦) HP Class represents market category and is not intended to define actual horsepower.
(*) Standard NPT (Male) pipe thread.
(**) This dimension may vary due to engine manufacturer's specifications.
NOTE: Dimensions are in inches (centimeters) and have a tolerance of ± 1/8".

Optional Wheel Kit

For Roll Frame Pumps

Model	Features	Ship Wt.
C402-90	Includes 10" semi-pneumatic tires on steel wheels with steel clamps and handles for universal mounting to frame.	25

Standard Features

- Buna-N Mechanical Seal and O-ring
- Stainless Steel High Efficiency Closed Impellers
- Two NPT Pipe Nipples
- Self-primes to 10 Ft. Without Foot Valve
- Replaceable Volute/Diffuser
- Maximum Temperature 180° F
- Maximum Working Pressure 150 PSI
- Delivers up to 68 GPM
- Strainer/Foot Valve Included
- Optional Wheel Kit Available